8-TON LONG RAM JACK

OWNER'S MANUAL

⚠ WARNING:

Read carefully and understand all **ASSEMBLY AND OPERATION INSTRUCTIONS** before operating. Failure to follow the safety rules and other basic safety precautions may result in serious personal injury.

Item# 46216

Thank you very much for choosing a Strongway product! For future reference, please complete the owner's record below:

Model: _____ Purchase Date: _____

Save the receipt, warranty and these instructions. It is important that you read the entire manual to become familiar with this product before you begin using it.

This machine is designed for certain applications only. The distributor cannot be responsible for issues arising from modification. We strongly recommend this machine not be modified and/or used for any application other than that for which it was designed. If you have any questions relative to a particular application, DO NOT use the machine until you have first contacted the distributor to determine if it can or should be performed on the product.

For technical questions please call **1-800-222-5381**.

INTENDED USE

This Jack is designed for lifting. The jack can be used vertically or angled to 3 degrees from vertical position. After lifting, loads must be immediately supported by appropriate means. Each model is suitable for use in lifting or positioning vehicles, machinery, houses and/or other building structures. These jacks comply with ASME PALD Standards.

.

TECHNICAL SPECIFICATIONS

	Description
Item	46216
Maximum Capacity	16,000 lbs.
Minimum Lift Height	24-3/4 inches
Maximum Lift Height	44-1/16 inches

Safe Operating Temperature is between 40°F – 105°F (4°C - 41°C)

GENERAL SAFETY RULES

WARNING: Read and understand all instructions. Failure to follow all instructions listed below may result in serious injury.

CAUTION: Do not allow persons to operate or assemble this jack until they have read this manual and have developed a thorough understanding of how the jack works.

WARNING: The warnings, cautions, and instructions discussed in this instruction manual cannot cover all possible conditions or situations that could occur. It must be understood by the operator that common sense and caution are factors that cannot be built into this product, but must be supplied by the operator.

SAVE THESE INSTRUCTIONS

IMPORTANT SAFETY CONSIDERATIONS

JACK USE AND CARE

- **Do not modify the Jack in any way.** Unauthorized modification may impair the function and/or safety and could affect the life of the equipment. There are specific applications for which the **Jack** was designed.
- **Always check of damaged or worn out parts before using the Jack.** Broken parts will affect the **Jack** operation. Replace or repair damaged or worn parts immediately.
- **Store idle Jack.** When **Jack** is not in use, store it in a secure place out of the reach of children. Inspect it for good working condition prior to storage and before re-use.
- **Not for use by children** or people with reduced mental capacity.
- **Do not use under the influence of drugs or alcohol.**
- **Ensure children and other bystanders** are kept at a safe distance when using jack.

INSPECTION

- Inspect the jack carefully before each use. Ensure the jack is not damaged, excessively worn, or missing parts.
- Do not use the jack unless it is properly lubricated.
- Using a jack that is not in good clean working condition or properly lubricated may cause serious injury.
- Inspect the work area before each use. Make sure it is free and clear of any potential hazards.

DO NOT OPERATE OR REPAIR THIS EQUIPMENT WITHOUT READING THIS MANUAL.

To maintain the Service Jack and user safety, the responsibility of the owner is to read and follow these instructions.

- Inspect the service jack for proper operation and function.
- Keep instructions readily available for equipment operators.
- Make certain all equipment operators are properly trained; understand how to safely and correctly operate the unit.
- Allow unit operation only with all parts in place and operating properly.
- Use only genuine replacement parts.
- Service and maintain the unit only with authorized or approved replacement parts; negligence will make the jack unsafe for use and void the warranty.
- Carefully inspect the unit on a regular basis and perform all maintenance as required.
- Store these instructions in the handle of your jack.
- Keep all decals on the unit clean and visible.

Safety

Always follow safety precautions when installing and operating this jack. Keep all decals on the unit clean and visible. Before proceeding ensure that you fully understand and comprehend the full contents of this manual. Failure to operate this equipment as directed may cause injury or death. The distributor is not responsible for any damages or injury caused by improper use or neglect.

⚠WARNING:

Always use Jack Stands!

DO NOT USE wood blocks or any other non-approved load sustaining devices. The manufacturer only warrants loads to be sustained by jack stands that meet current ASME standards.

DO NOT USE wood blocks or any other non-approved lifting devices for a means of lifting with the jack and or load being raised. Failure to head these warnings may cause injury or death.

SAFETY MARKINGS

WARNING:

1. Study, understand, and follow all instructions before operating this device.
2. Do not exceed rated capacity.
3. Use only on hard, level surfaces.
4. Lifting device only. Immediately after lifting, support the vehicle with appropriate means.
5. Lift only on areas of the vehicle as specified by the vehicle manufacturer.
6. No alterations shall be made to this product.
7. Only attachments and/or adapters supplied by the manufacturer shall be used.
8. Do not get under or allow anyone under the vehicle until it has been supported by jack stands.
9. Center load on saddle prior to lifting.
10. Some vehicles require an adapter to properly engage the frame for lifting. Use vehicle manufacturer's instructions on proper lifting.
11. Do not use this jack for any use other than the manufacturer specified usage.
12. Do not drop load suddenly, the resulting shock may cause damage to the unit.
13. Failure to heed these markings may result in personal injury and/or property damage.

GENERAL SAFETY INSTRUCTIONS

*** Position the Jack**
Position the jack to only lift on the areas of the vehicle as specified by the vehicle manufacturer.
*** Always Use Jack Stands**
After lifting the vehicle always support the load with appropriately rated vehicle Jacks stands before working on the vehicle.
*** Do Not Overload Jack**
Do not overload this jack beyond its rated capacity. Overloading this jack beyond its rated capacity can cause damage to or failure of the jack.
*** Always Use on Hard Level Surfaces**
This jack is designed only for use on hard level surfaces capable of sustaining the load. Use on unstable or other possible loss of load.
*** Chock and Block (Stabilize)**
-Apply parking brake in vehicle before operating jack.
-A chock is a wedge for steadying an object and holding it motionless, or for preventing the movement of a wheel Chock the wheel opposite the end being lifted.
-When you block a load, you secure and support a load that is being lifted. The block(s) or stabilizer(s) should have a weight capacity that is greater than the weight of the load which is being lifted.
*** Center Load on Jack Saddle**
Center load on jack saddle before lifting vehicle.
Off-center loads and loads lifted when the jack is not level can cause loss of load or damage to the jack.
***Do not raise or lower the vehicle unless tools, materials and people are clear.**
When the lift is being lowered, make sure everyone is standing at least six feet away. Be sure there are no tools or equipment left under or around the jack before lowering.
*** Always lower the jack slowly.**
*** DO NOT USE THE JACK TO SUPPORT OR STABILIZE A LOAD.**
Using the jack to support or stabilize a load may result in unexpected movement and result in serious injury, being crushed and death. Always securely chock and block (stabilize) the load to be lifted. Never place any part of the body under a raised load without properly chocking and supporting the load.
*** Never use the jack on curved or tubular vehicle**
Bumpers, this will result in the vehicle slipping off the jack and falling, causing serious injury or death. Use a bumper lift to lift most vehicles with curved bumpers or plastic bumpers.
*** Wear ANSI-approved safety glasses and heavy-duty work gloves during use.**
*** Do not adjust the safety valve.**
*** Do not move or dolly vehicle while jack is in use.**
*** Stay alert. Use caution and common sense when operating jack.** Do not use a jack when tired, incoherent, dizzy, under the use or drugs or alcohol.
Training
-Read this manual before use. Do not allow anyone who has not read this manual, and/or does not understand the requirements, use the jack.
Spectators
-Do not allow bystanders around the jack or under the load supported only by the jack. -Do not allow anyone in the vehicle while the jack is in use. Keep all bystanders away from vehicle when in use.
Inspection
-Inspect the jack carefully before each use. Ensure the jack is not damaged, excessively worn, or missing parts. -Do not use the jack unless it is properly lubricated. -Using a jack that is not in good clean working condition or properly lubricated may cause serious injury.
Additional Notes:
Save the receipt, warranty and these instructions.
Do not modify the jack in any way. Unauthorized modification may impair the function and/or safety and could affect the life of the equipment. There are specific applications for which the jack was designed.
Always check for damaged or worn out parts before using the jack. Broken parts will affect the equipment operation. Replace or repair damaged or worn parts immediately.
When jack is not in use, store it in a secure place out of the reach of children. Inspect it for good working condition prior to storage and before re-use.

ASSEMBLY

1. Familiarize yourself with the jack.

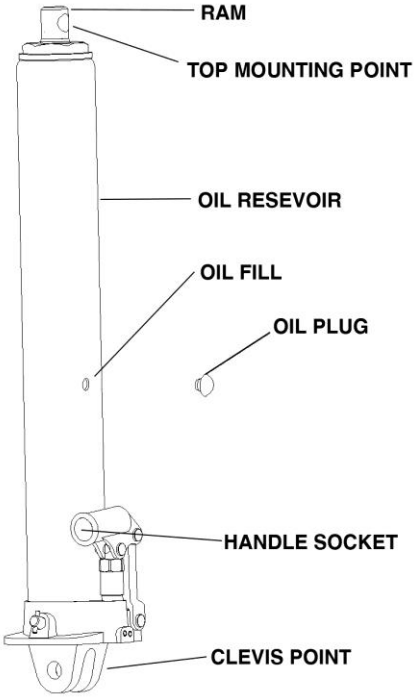

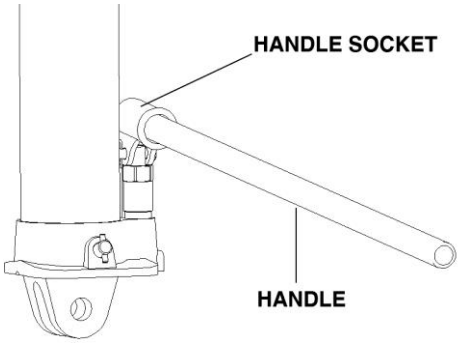

2. Use handle (21) to Turn release valve (28) counterclockwise one full turn to the open position.

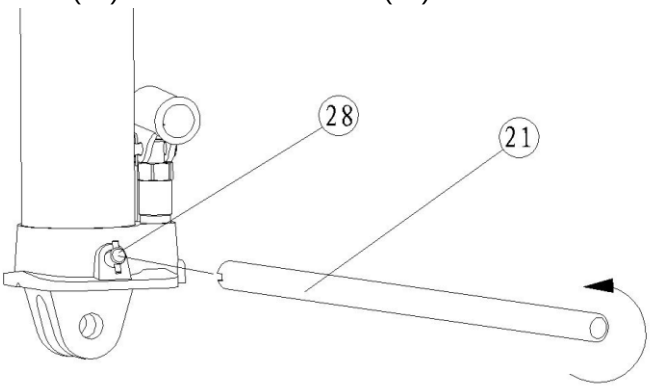

3. Line up the handle to the handle socket located on the side of the jack, then insert the handle inside the handle socket.

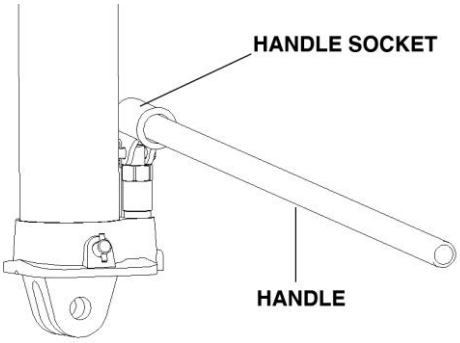

4. Secure the handle in place inside the handle socket. Without any weight on the jack, cycle the lift up and down several times to insure the hydraulic system is operating properly. (Perform to the Air Purge Procedure before first use.)

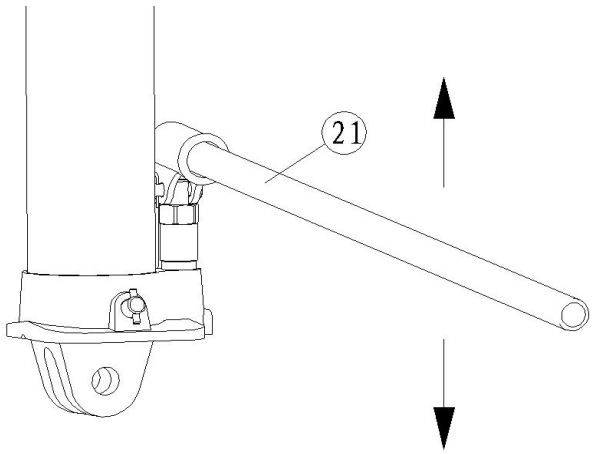

SYSTEM AIR PURGE PROCEDURE

IMPORTANT: BEFORE FIRST USE

Perform the following Air Purge Procedure to remove any air that may have been introduced into the hydraulic system as a result of product shipment and handling. This step is to be completed without any weight on the jack.

1. Turn release valve counterclockwise one full turn to the open position.

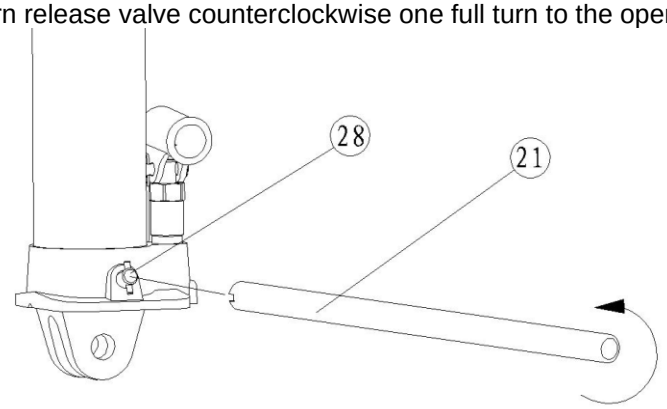

2. Rapidly pump the handle 6-8 times. Leave handle in down position to expose oil fill plug.

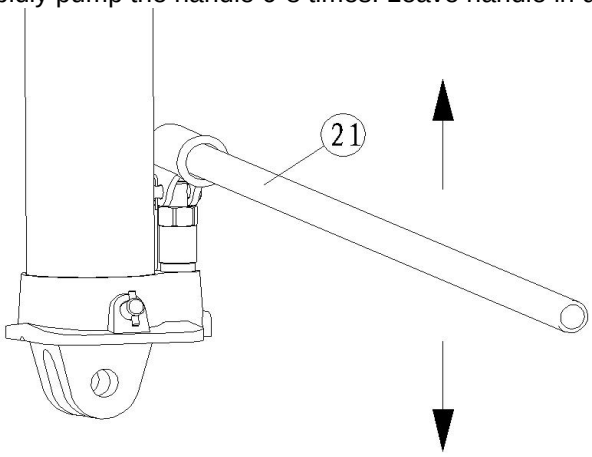

3. Purge air trap in the system by opening the attached oil vent, do not remove oil vent. Oil vent Is to stay open at all times when in use. (Oil vent is closed during shipping)
   For units with rubber oil plugs: {With a flat blade screwdriver, push the oil fill plug slightly to the side to purge trapped air from system. (Use caution not to tear or puncture the oil plug.)}

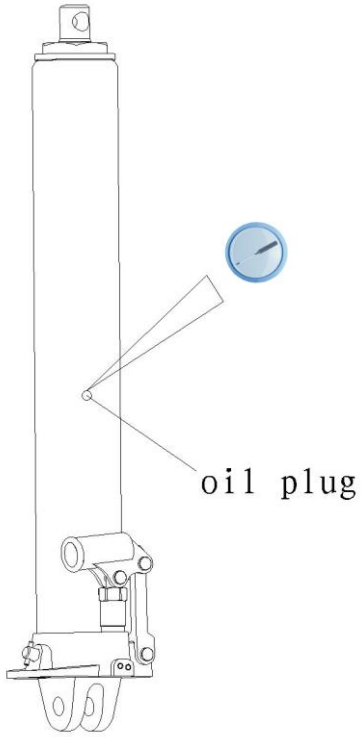

4. Turn release valve clockwise to the closed position.

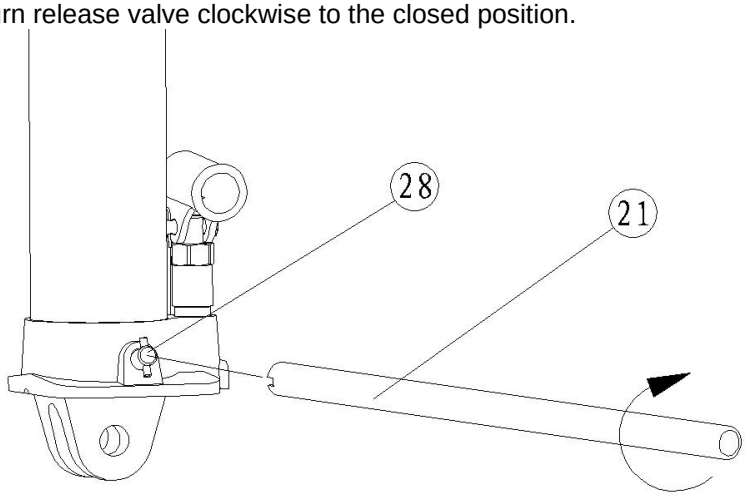

5. Jack is now ready for use. Check for proper pump action.

BEFORE USE

1. Before using this product, read the owner's manual completely and familiarize yourself thoroughly with the product and the hazards associated with its improper use.
2. Perform the air purge procedure. (See previous instructions for system purge procedure.)
3. Check and that the pump operates smoothly before putting into service.
4. Inspect before each use. Do not use if bent, broken or cracked components are noted.

OPERATION

RAISING THE JACK

1. Position the jack near desired lift point.
2. Assemble the handle, ensuring that handle aligns with handle socket.
3. Close the release valve by turning it clockwise until it is firmly closed.

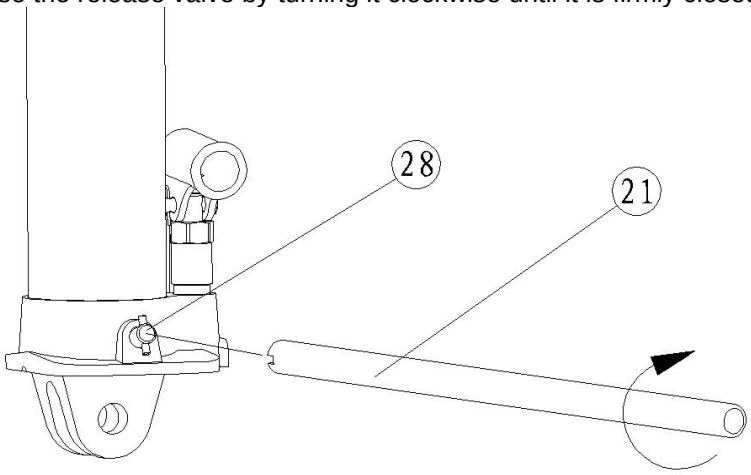

4. Before raising check and verify the load is centered and also has full contact with the lifting point.
5. Pump handle to lift to desired lifting height. After lifting, support the load appropriately before starting work.

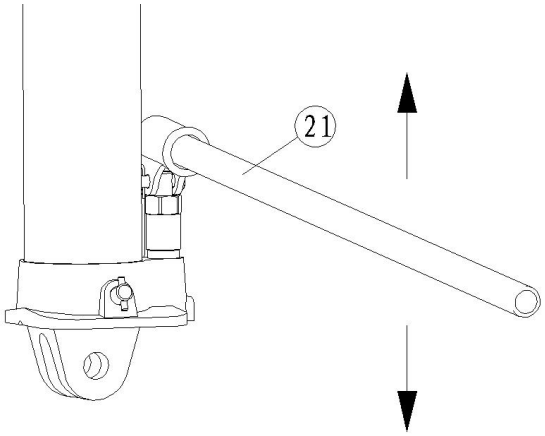

WARNING: STOP PUMPING WHEN THE RAM RISES TO THE RED STOP MARK ON THE RAM. THIS WILL PREVENT THE JACK FROM POSSIBLE MALFUNCTION AND IMPROPER USE.

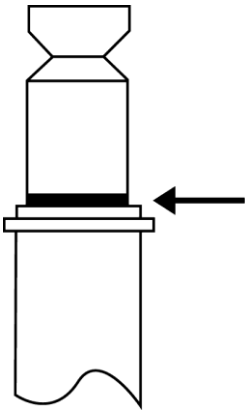

CAUTION: NEVER WIRE, CLAMP OR OTHERWISE DISABLE THE LIFT CONTROL VALVE TO FUCTION BY ANY MEANS OTHER THAN BY USING THE OPERATOR'S HAND. USE THE HANDLE PROVIDED WITH THIS PRODUCT OR AN AUTHORIZED REPLACEMENT HANDLE TO ENSURE PROPER RELEASE VAVLE OPERATION. DO NOT USE EXTENSIONS ON THE OPERATING HANDLE.

LOWERING THE JACK

1. Grasp the handle firmly with both hands. Securely hold on to the jack handle so your hands do not slip and ensure the release valve does not rapidly lower.
2. Carefully open the Release Valve by slowly turning the handle counterclockwise. (Do not allow bystanders around the jack or under the load when lowering the jack.

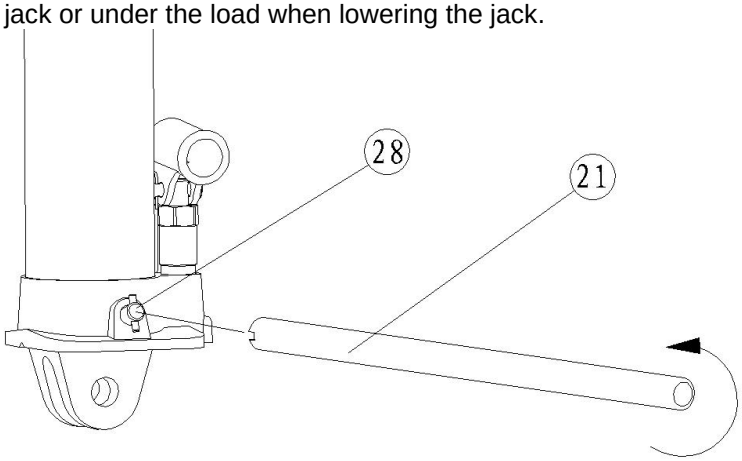

3. After removing jack from under the load, push ram and handle sleeve down to reduce exposure to rust and contamination.

WARNING: STOP PUMPING WHEN THE RAM RISES TO THE RED STOP MARK ON THE RAM. THIS WILL PREVENT THE JACK FROM POSSIBLE MALFUNCTION AND IMPROPER USE.
USE EXTREME CAUTION WHEN LOWERING THE JACK. THE JACK HANDLE MAY TURN RAPIDLY. OPENING THE RELEASE VALVE TO FAST CAN CAUSE THE JACK TO LOWER RAPIDLY. FAILURE TO HEAD THESE WARNINGS COULD CAUSE SERIOUS INJURY OR DEATH.

MAINTENANCE INSTRUCTION

If you use and maintain your equipment properly, it will give you many years of service. Follow the maintenance instructions carefully to keep your equipment in good working condition. **Never perform any maintenance on the equipment while it is under a load.**

Inspection

You should inspect the product for damage, wear, broken or missing parts (e.g.: pins) and that all components function before each use. Follow lubrication and storage instructions for optimum product performance.

Binding

If the product binds while under a load, use equipment with equal or a larger load capacity to lower the load safely to the ground. After un-binding; clean, lubricate and test that equipment is working properly. Rusty components, dirt, or worn parts can be causes of binding Clean and lubricate the equipment as indicated in the lubrication section. Test the equipment by lifting without a load. If the binding continues, contact Customer Service.

Cleaning

If the moving parts of the equipment are obstructed, use cleaning solvent or another good degreaser to clean the equipment. Remove any existing rust, with a penetrating lubricant.

Lubrication

This equipment will not operate safely without proper lubrication. Using the equipment without proper lubrication will result in poor performance and damage to the equipment. Some parts in this equipment are not self-lubricating inspect the equipment before use and lubricate when necessary. After cleaning, lubricate the equipment using light penetrating oil, lubricating spray.

-Use a good lubricant on all moving parts.
-For light duty use, lubrication once a month.
-For heavy and constant use, lubrication is recommended every week.
-NEVER USE SANDPAPER OR ABRASIVE MATERIAL ON THESE SURFACES!

Rust Prevention:

-Check rams and pump plungers on the power unit assemblies daily for any signs of rust or corrosion.
Without a load lift the equipment as high as it goes and look under and behind the lifting points. If signs of rust are visible clean as needed.

Grease Fittings

-Some models contain grease fittings they will regularly need to be greased and lubricated.

How the Jack Operates

With release valve closed, an upward stroke of the jack handle draws oil from the reservoir tank into the plunger cavity. Hydraulic pressure holds the valve closed, which keeps the oil in the plunger cavity. A downward stroke of the jack handle releases oil into the cylinder, which forces the ram out. This raises the saddle. When the ram reaches maximum extension, oil is bypassed back into the reservoir to prevent an over extended ram stroke and possible damage to the jack. Opening the release valve allows oil to flow back into reservoir. This releases hydraulic pressure on the ram, which results in lowering the saddle.

Storing the Jack

1. Lower the Lifting Ram.
2. Place the handle in the upright position.
3. Store in a dry location, recommended indoors.

Note: If the jack is stored outdoors, be sure to lubricate all parts before and after use to ensure the jack stays in good working condition.

TO ADD JACK OIL:

1. Position the jack on level as shown and lower the ram.
2. Remove the oil plug.

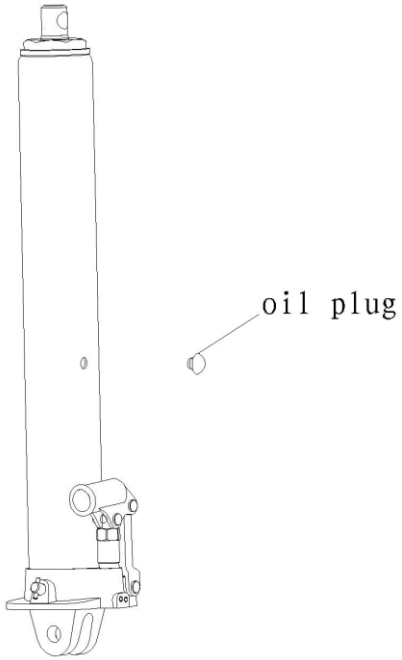

3. Fill the oil case until oil level is just beneath the lower rim of the oil fill hole.

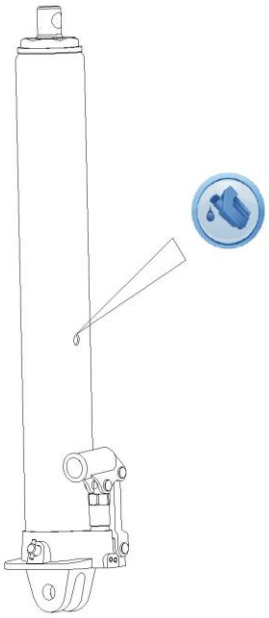

4. Replace oil plug.

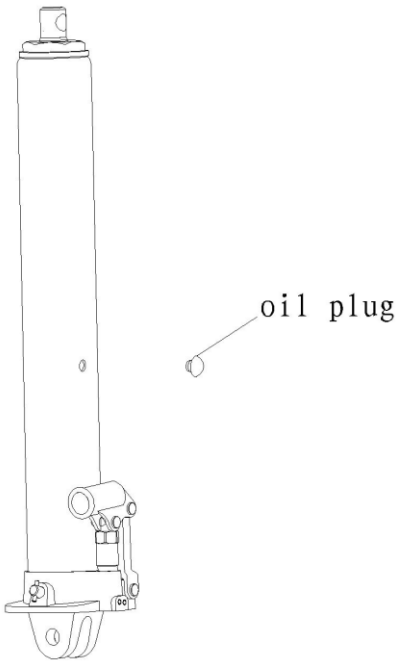

5. Perform the Air Purge Procedure.

TO REPLACE JACK OIL:

1. Position the jack on level as shown and lower the ram.
2. Open release valve by turning handle counter-clockwise (4 full turns).

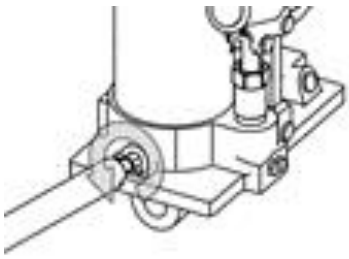

3. Remove the oil fill plug.

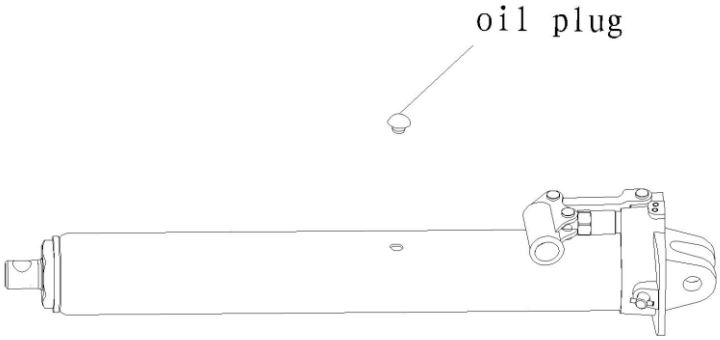

4. Turn the jack on its side so that old oil will drain from the oil fill hole.

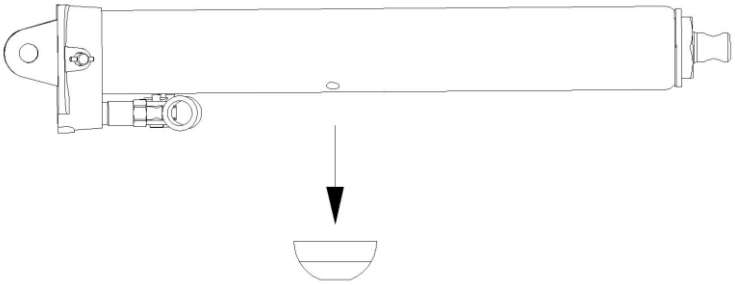

5. Position the jack on level ground and with the ram in the lowered position.
6. Fill the oil case until oil level is just beneath the lower rim.
   KEEP DIRT AND OTHER MATERIAL CLEAR WHEN POURING.

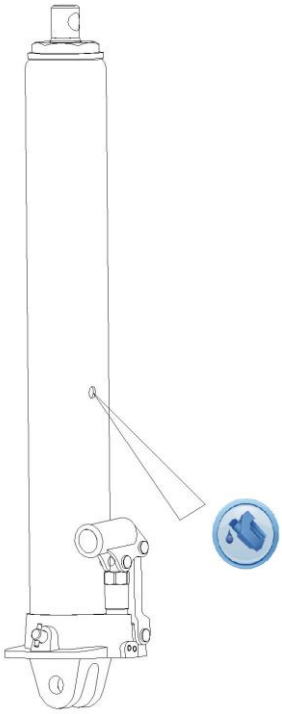

7. Replace oil plug.

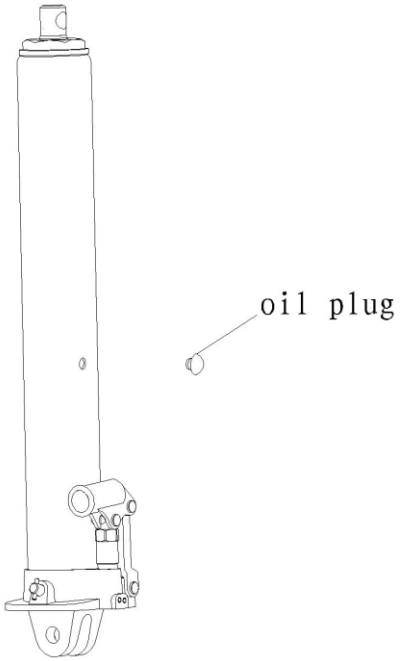

8. Perform the Air Purge Procedure.

⚠ ADDITIONAL WARNINGS:

- DO NOT USE MOTOR OIL IN THE JACK.
- ONLY USE ANTI-FOAMING JACK OIL.
- ALWAYS USE A GOOD GRADE HYDRAULIC JACK OIL.
- DO NOT USE HYDRAULIC BRAKE FLUID, ALCOHOL, GLYCERINE, DETERGENT, MOTOR OIL OR DIRTY OIL.
- USE OF A NON-RECOMMENDED FLUID CANCAUSE DAMAGE TO A JACK.
- AVOID MIXING DIFFERENT TYPES OF FLUID AND NEVER USE BRAKE FLUID, TURBINE OIL, TRANSMISSION FLUID, MOTOR OIL OR GLYCERIN. IMPROPER FLUID CAN CAUSE PREMATURE FAILURE OF THE JACK AND THE POTENTIAL FOR SUDDEN AND IMMEDIATE LOSS OF LOAD.
- DISPOSE OF HYDRAULIC FLUID IN ACCORDANCE WITH LOCAL REGULATIONS.

Additional Jack Notes:

- Periodically check the pump piston and ram for signs of rust or corrosion. Clean as needed and wipe with an oil cloth. NEVER USE SANDPAPER OR ABRASIVE MATERIAL ON THESE SURFACES!
- When not in use, store the jack with pump piston and ram fully retracted.

TROUBLESHOOTING

JACK WILL NOT LIFT LOAD	JACK WILL NOT HOLD LOAD	JACK WILL NOT LOWER	POOR JACK LIFTING	WILL NOT LIFT TO FULL EXTENSION	CAUSES AND SOLUTIONS
X	X		X		Release valve is not completely closed (Turn handle clockwise).
X					Weight Capacity Exceeded.
X			X		Air is in the hydraulics. Purge air from system.
X	X		X	X	Low oil level. Add oil as required.
		X			Oil reservoir is overfilled: Drain excessive oil. Lubricate moving parts.
		X			Jack is binding or foreign obstruction
X	X		X		Power unit malfunctioning. Replace the power unit.

ASSEMBLY DIAGRAM

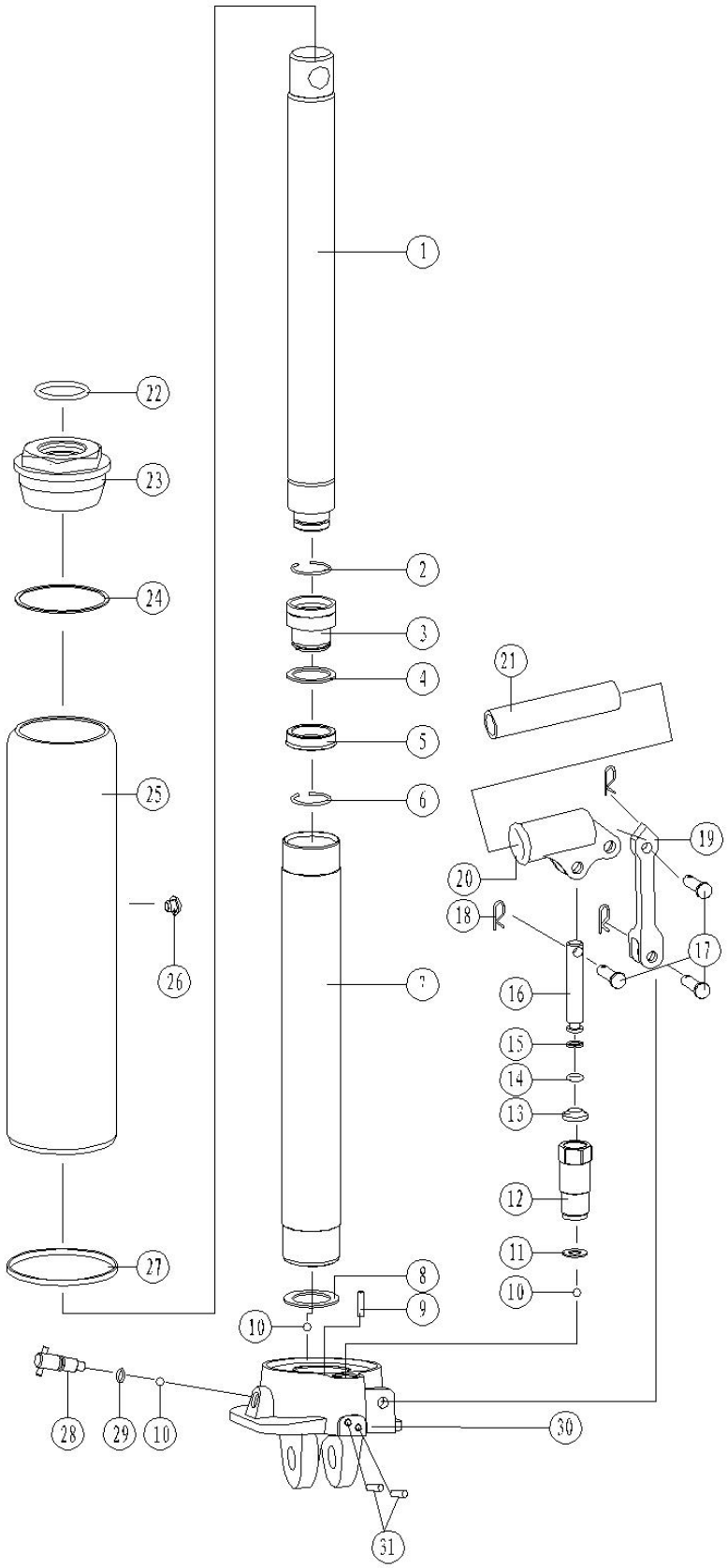

PARTS LIST

Index #	Description	Part No.	Qty.
1	T30306-01	Ram	1
2	T30306-06	Wire ring	1
3	T30306-10	Ram	1
4	T30306-12	Split washer	1
5	T30306-11	Y-Ring	1
6	T30306-09	Wire ring	1
7	T30306-03	Cylinder	1
8	QYL3.2-12	Copper Washer	1
9	T90403-35	Tube	1
10	GB308-84	Ball	3
11	QYL8-13	Copper Washer	1
12	QYL8-10	Pump Cylinder	1
13	QYL8-09	Seal Ring	1
14	QYL8-28	O-Ring	1
15	QYL8-27	Back up Ring	1
16	QYL8-26	Plunger	1
17	QYL8-19	Pin	3
18	QLQD2B-3	R-Ring	3
19	QYL8-08B	Connecting rod	1
20	QYL8-22B	Handle Socket	1
21	QYL3.2-23	Handle	1
22	GB3452.1-92	0-Ring	1
23	T30306-02	Top Nut	1
24	T90803-03	Sealing Gasket	1
25	T30306-04	Oil Tank	1
26	TF1201C-29	Oil Plug	1
27	T90803-15	Seal Ring	1
28	QYL8-25A	Release spindle	1
29	QLQ2.1-17	O-Ring	1
30	T30306-07	Valve Block	1
31	QYL8-11	Bolt	2

Safe Operating Temperature is between 40°F – 105°F (4°C - 41°C)

REPLACEMENT PARTS

For replacement parts Customer Service at **1-800-222-5381**. Not all equipment components are available for replacement; illustrations provided are a convenient reference of location and position in the assembly sequence. When ordering parts the following will be required: Model Number, Serial Number and Description.
The distributor reserves the rights to make design changes and or improvements to product lines and manuals without notice.

For replacement parts and technical questions, please call 1-800-222-5381.

Limited Warranty

Limited Warranty
Northern Tool and Equipment Company, Inc. ("We" or "'Us") warrants to the original purchaser only ("You" or "Your") that the Strongway product purchased will be free from material defects in both materials and workmanship, normal wear and tear excepted, for a period of one year from date of purchase. The foregoing warranty is valid only if the installation and use of the product is strictly in accordance with product instructions. There are no other warranties, express or implied, including the warranty of merchantability or fitness for a particular purpose. If the product does not comply with this limited warranty, Your sole and exclusive remedy is that We will, at our sole option and within a commercially reasonable time, either replace the product without charge to You or refund the purchase price (less shipping). This limited warranty is not transferable.

Limitations on the Warranty
This limited warranty does not cover: (a) normal wear and tear; (b) damage through abuse, neglect, misuse, or as a result of any accident or in any other manner; (c) damage from misapplication, overloading, or improper installation; (d) improper maintenance and repair; and (e) product alteration in any manner by anyone other than Us, with the sole exception of alterations made pursuant to product instructions and in a workmanlike manner.

Obligations of Purchaser
You must retain Your product purchase receipt to verify date of purchase and that You are the original purchaser. To make a warranty claim, contact Us at 1-800-222-5381, identify the product by make and model number, and follow the claim instructions that will be provided. The product and the purchase receipt must be provided to Us in order to process Your warranty claim. Any returned product that is replaced or refunded by Us becomes our property. You will be responsible for return shipping costs or costs related to Your return visit to a retail store.

Remedy Limits
Product replacement or a refund of the purchase price is Your sole remedy under this limited warranty or any other warranty related to the product. We shall not be liable for: service or labor charges or damage to Your trailer incurred in removing or replacing the product; any damages, including, without limitation, damages to tangible personal property or personal injury, related to Your improper use, installation, or maintenance of the product; or any indirect, incidental or consequential damages of any kind for any reason.

Assumption of Risk
You acknowledge and agree that any use of the product for any purpose other than the specified use(s) stated in the product instructions is at Your own risk.

Governing Law
This limited warranty gives You specific legal rights, and You also may have other rights, which vary from state to state. Some states do not allow limitations or exclusions on implied warranties or incidental or consequential damages, so the above limitations may not apply to You. This limited warranty is governed by the laws of the State of Minnesota, without regard to rules pertaining to conflicts of law. The state courts located in Dakota County, Minnesota shall have exclusive jurisdiction for any disputes relating to this warranty.

STRONGWAY

Distributed by
Northern Tool + Equipment Co., Inc.
Burnsville, Minnesota 55306
NorthernTool.com
Made in China