SIMPLEX®

A Division Of Templeton, Kenly & Co., Inc.

Revised 7-98

LOW PROFILE CYLINDERS

RL10-1, 20-1, 30-2, 50-2, 100-2

REPAIR PARTS SHEET

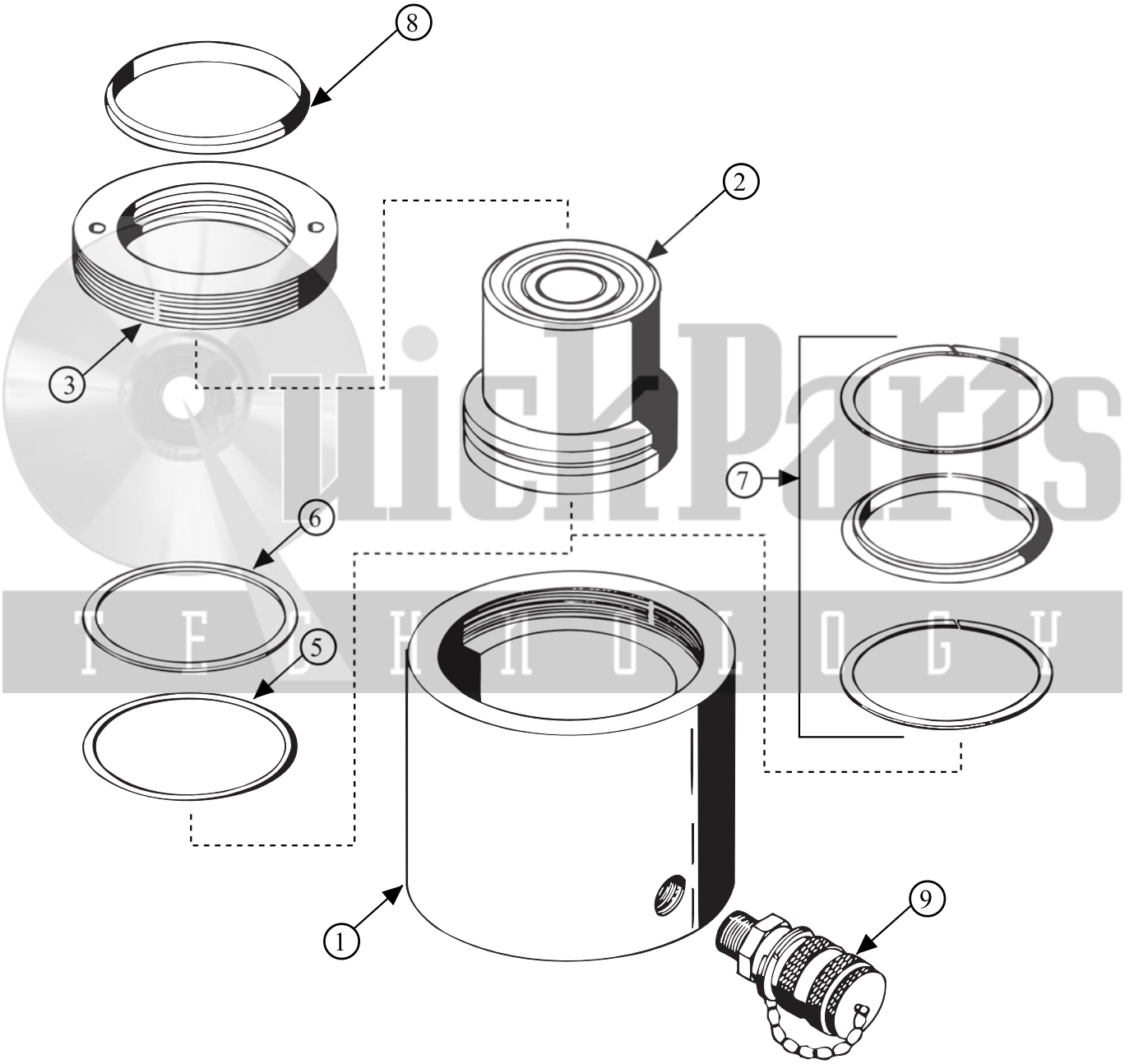

HydraulicPartsTechnology

LOW PROFILE CYLINDERS
PARTS LIST

ITEM NO.	DESCRIPTION	QTY	PART NO.				
			RL10-1	RL20-1	RL30-2	RL50-2	RL100-2
1	Housing	1	85521	85533	85536	85538	85541
2	Piston	1	85522	85534	85537	85539	85542
3	Retaining Nut	1	85523	85535	85535	85540	85547
5	O-Ring	1	*	*	----	----	----
6	BU-Ring	1	*	*	----	----	----
7	T-Seal	1	----	----	†	†	†
8	Wiper	1	*	*	†	†	†
9	Ram Half Coupler	1	18211	18211	18211	18211	18211
	Packing Kit		54300	54301	54302	54303	54304

* Included in Packing Kit for 10 & 20 Ton Models.
† Included in Packing Kit for 30,50 & 100 Ton Models.
100 Ton Model Includes Carrying Handle (not shown).

QuickParts TECHNOLOGY

ENGINEERING DATA

- RL10-1....Capacity 10 Tons @ 8,940 PSI On 2.23 Sq. In. Ram Area. Stroke 1 1/2". Fluid Vol. Req. 3.4 cu. in.
- RL20-1....Capacity 20 Tons @ 9,030 PSI On 4.43 Sq. In. Ram Area. Stroke 1 3/4". Fluid Vol. Req. 7.8 cu. in.
- RL30-2....Capacity 30 Tons @ 9,250 PSI On 6.49 Sq. In. Ram Area. Stroke 2 7/16". Fluid Vol. Req. 15.8 cu. in.
- RL50-2....Capacity 50 Tons @ 10,400 PSI On 9.62 Sq. In. Ram Area. Stroke 2 3/8". Fluid Vol. Req. 22.8 cu. in.
- RL100-2..Capacity 100 Tons @ 10,200 PSI On 19.63 Sq. In. Ram Area. Stroke 2 1/4". Fluid Vol. Req. 44.2 cu. in.

WARRANTY

Templeton, Kenly & Co., Inc. warrants to the purchaser of its products that if the product or any part thereof in the judgement of Templeton, Kenly & Co., Inc. is proven to be defective in material or workmanship within one year from the date of original purchase (two years on Heavy Duty Hydraulics and five years on Super Jacks), such defects will be repaired or replaced (at the company's option) free of charge for parts and labor.

This warranty does not apply to any product which has been damaged by accident or which has been misused, abused, altered, or repaired by anyone other than recognized Templeton, Kenly authorized Service Centers.

This warranty is in lieu of all other warranties expressed or implied, and no other person is authorized to assume for Templeton, Kenly & Co., Inc. any other liability in connection with the sale of this product.

Simplex Division of Templeton, Kenly & Co., Inc.
2525 Gardner Rd. • Broadview, IL 60153 • Phone: (708)865-1500 Fax: (708)865-0894