SIMPLEX®

RFS SERIES
SPRING RETURN FLAT JACKS
10 - 150 TON CAPACITY
REPAIR PARTS SHEET

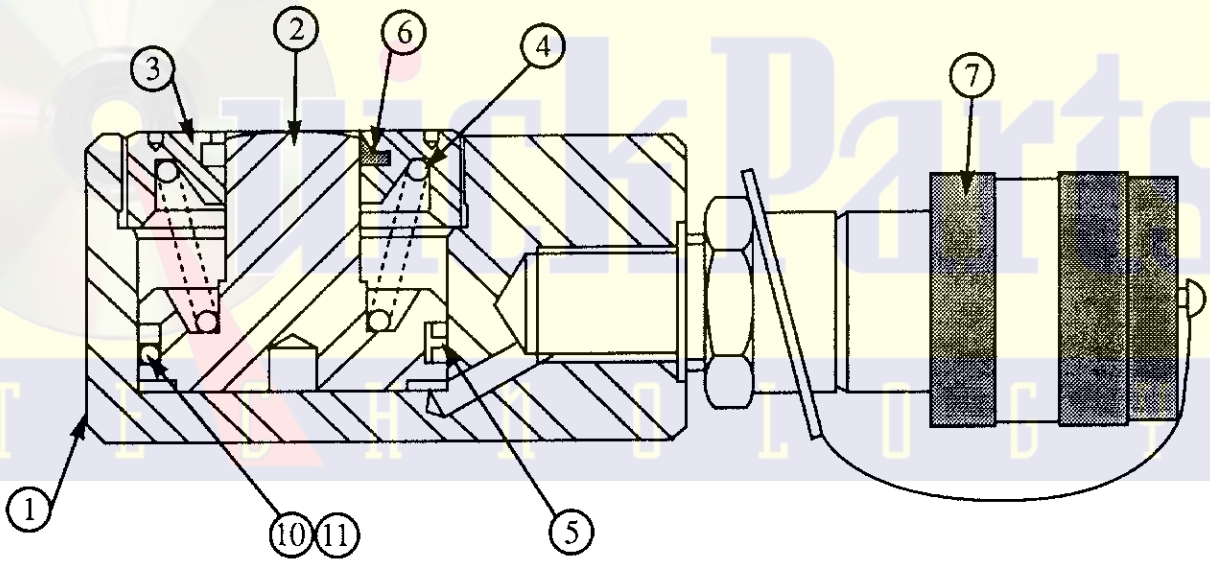

RFS SERIES
10 - 150 TON SPRING RETURN FLAT JACKS
PARTS LIST

ITEM NO.	DESCRIPTION	PART NO.							QTY
		RFS-10	RFS-20	RFS-30	RFS-50	RFS-75	RFS-100	RFS-150	
1	Housing	85552	85554	85559	85561	87769	87770	87771	1
2	Piston	89823	89832	89812	89834	89842	89836	89838	1
3	Retaining Nut	89816	89824	89825	89826	89841	89827	89828	1
4	Spring	98817	89818	89819	89820	89830	89821	89822	1
5	T-Seal*	---	---	---	---	---	---	---	1
6	Wiper*	---	---	---	---	---	---	---	1
7	Ram Half Coupler	18211	18211	18211	18211	18211	18211	18211	1
10	O-Ring*	---	---	---	---	---	---	---	1
11	B.U. Ring*	---	---	---	---	---	---	---	1
	Packing Kit	54306	54307	54308	54309	54310	54304	54312	1

* Included in Packing Kit.

QuickParts TECHNOLOGY

WARRANTY

Templeton, Kenly & Co., Inc. warrants to the purchaser of its products that if the product or any part thereof in the judgement of Templeton, Kenly & Co., Inc. is proven to be defective in material or workmanship within one year from the date of original purchase (two years on Heavy Duty Hydraulics and five years on Super Jacks), such defects will be repaired or replaced (at the company's option) free of charge for parts and labor.

This warranty does not apply to any product which has been damaged by accident or which has been misused, abused, altered, or repaired by anyone other than recognized Templeton, Kenly authorized Service Centers.

This warranty is in lieu of all other warranties expressed or implied, and no other person is authorized to assume for Templeton, Kenly & Co., Inc. any other liability in connection with the sale of this product.

Simplex Division of Templeton, Kenly & Co., Inc.
2525 Gardner Rd. • Broadview, IL 60153 • Phone: (708)865-1500 Fax: (708)865-0894 Toll Free: 1(800)323-9114