TEMPLETON, KENLY & CO.
2525 Gardner Road • Broadview, Illinois 60153 • 312–865-1500

REPAIR PARTS SHEET FOR

Simplex Mine Roof Jacks

M9 SERIES
M17 SERIES

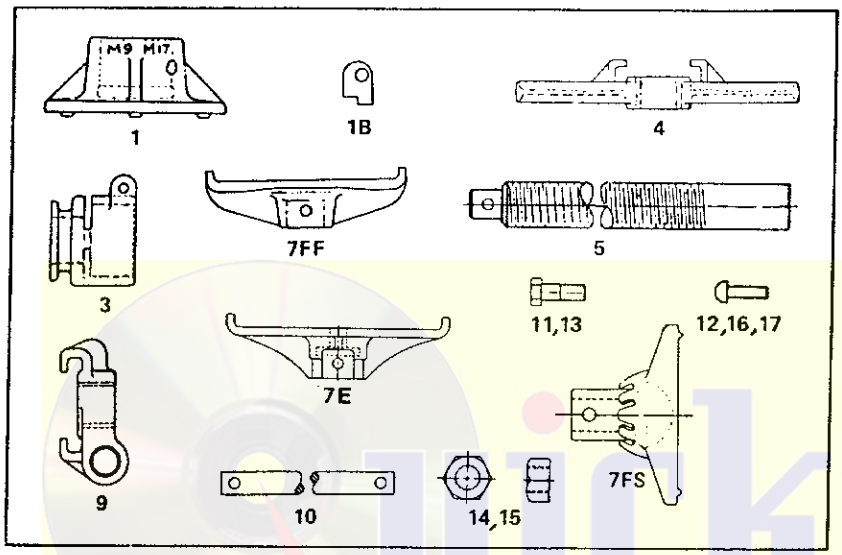

MODEL NO.	ORDER NO.
M9L-FF	(09157)
M9L-FS	(09159)
M9S-FF	(09158)
M9S-FS	(09160)
MS9L-FF	(09163)
MS9L-FS	(09167)
MS9S-FF	(09164)
MS9S-FS	(09168)
M17L-E	(09199)
M17L-FS	(09201)
M17S-E	(09200)
M17S-FS	(09202)
MS17L-E	(09211)
MS17L-FF	(09205)
MS17L-FS	(09209)
MS17S-E	(09212)
MS17S-FF	(09206)
MS17S-FS	(09210)

ITEM NO.	JACK NO. M9 SERIES CONTROL NO.	JACK NO. M17 SERIES CONTROL NO.	NAME OF PART
1	91625	91625	Round Base
1B	91626	91626	Pipe Key
3	91605	91627	Retainer Housing
4	91595	91617	Lever Nut
5	91598	91619	Screw
7E	--	80101	Type "E" Timber Head
7FF	91602	91622	Type "FF" Timber Head
7FS	91603	91623	Swivel Shoe Assembly
9	91606	91629	Retainer Nut
10	91628	91628	Slide Handle
11	93529	93529	Base Hex. Hd. Mach. Bolt
12	93906	93906	Head, Rd. Hd. Rivet
13	94814	94814	Retainer Housing, Hex. Hd. Mach. Bolt
14	93855	93855	Base, Hex. Nut
15	93851	93851	Retainer Housing Hex. Nut
16	93905	93907	Swivel Shoe Rd. Hd. Rivet
17	93897	93897	Slide Handle, Rd. Hd. Rivet

In ordering, specify the CONTROL NUMBER, NAME OF PART and JACK NUMBER.