90 DAYS LIMITED WARRANTY

For a period of ninety (90) days from date of purchase, **Shinn Fu Co. of America, Inc.** will repair or replace, at its option, without charge, any of its products which fails due to a defect in material or workmanship, or which fails to conform to any implied warranty not excluded hereby.

Performance of any obligation under this warranty may be obtained by returning the warranted product, freight prepaid, to **Shinn Fu Co. of America, Inc.** Warranty Service Department, 10939 N. Pomona Ave., Kansas City, MO 64153.

Except where such limitations and exclusions are specifically prohibited by applicable law, (1) the CONSUMER'S SOLE AND EXCLUSIVE REMEDY SHALL BE THE REPAIR OR REPLACEMENT OF DEFECTIVE PRODUCTS AS DESCRIBED ABOVE, and (2) **Shinn Fu Co. of America, Inc.** SHALL NOT BE LIABLE FOR ANY CONSEQUENTIAL OR INCIDENTAL DAMAGE OR LOSS WHATSOEVER, and (3) THE DURATION OF ANY AND ALL EXPRESSED AND IMPLIED WARRANTIES, INCLUDING WITHOUT LIMITATION, ANY WARRANTIES OF MERCHANTABILITY AND FITNESS FOR A PARTICULAR PURPOSE, IS LIMITED TO A PERIOD OF NINETY (90) DAYS FROM DATE OF PURCHASE.

Some states do not allow limitations on how long an implied warranty lasts, so the above limitation may not apply to you. Some states do not allow the exclusion or limitation of incidental or consequential damages, so the above limitation or exclusion may not apply to you. This warranty gives you specific legal rights, and you may also have other rights which vary from state to state.

Pro-Lift®

Heavy Duty Car Dolly

Operating Instructions & Parts Manual

Model Number	Capacity
T-3310	1,000 lbs

⚠ ATENCIÓN

- Leer, comprender, y seguir las instrucciónes antes de utilizar el aparato.
- El manual de instrucciónes y la información de seguridad deben estar comunicado en lengua del operador antes del uso.
- No seguir estas indicaciónes puede causar daños personales o materiales.

⚠ WARNING

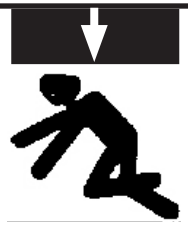

To avoid crushing and related injuries: NEVER work on, under or around a vehicle supported by dollies.

Shinn Fu Company of America
10939 N. Pomona Ave.
Kansas City, MO 64153
Phone (816)891-6390, fax (816)891-6599

© Jul. 2015

Printed in China

Save these instructions. For your safety, read, understand, and follow the information provided with and on these car dollies. The owner and operator of this equipment shall have an understanding of this product and safe operating procedures before attempting to use. The owner and operator shall be aware that use and repair of this product may require special skills and knowledge. Instructions and safety information shall be conveyed in the operator's native language before use of this dolly is authorized. If any doubt exists as to the safe and proper use of this product, remove from service immediately. **Inspect before each use.** Do not use if broken, bent, cracked or damaged parts are noted. Any car dolly that appears damaged in any way, or operates abnormally shall be removed from service immediately. If the car dolly has been or suspected to have been subjected to a shock load (a load dropped suddenly, unexpectedly), immediately discontinue use until product has been checked by an authorized service center. It is recommended that an annual inspection be done by qualified personnel. Labels and Owners Manuals are available from manufacturer.

PRODUCT DESCRIPTION

This Pro-Lift car dolly is designed to safely manuever and or position a vehicle. This product shall be used in pairs for a given axle.

BEFORE USE (refer to Fig.1 and Replacement Parts Illustration on Page 6 for location of components)

1. Inspect dolly before each use. Do not use if bent, broken or cracked components are noted. Ensure that casters move freely. Check for and tighten any loose assemblies.
2. Verify that the product and the application are compatible, if in doubt call Pro-Lift Customer Support @ (816) 891-6390.

BEFORE USE (continued)

3. Before using this product, read the owner's manual completely and familiarize yourself thoroughly with the product and the hazards associated with its improper use.

⚠ WARNING

Study, understand, and follow all instructions before operating this device. Do not exceed rated capacity. Use only on hard, level surface. Before moving, lower the load to the lowest possible point. Activate the wheel-and/or caster-locking devices after moving a vehicle. Never work on, around, or under a vehicle supported by vehicle-moving dollies. Failure to heed and understand these instructions may result in personal injury and/or property damage. Use of this product is limited to transporting only. No alterations shall be made to this product.

⚠ ATENCIÓN

- Leer, comprender, y seguir las instrucciónes antes de utilizar el aparato.
- El manual de instrucciónes y la información de seguridad deben estar comunicado en lengua del operador antes del uso.
- No seguir estas indicaciónes puede causar daños personales o materiales.

SPECIFICATIONS

MODEL	MAX WHEEL WIDTH	CAPACITY
T-3310	12 IN	1,000 LBS

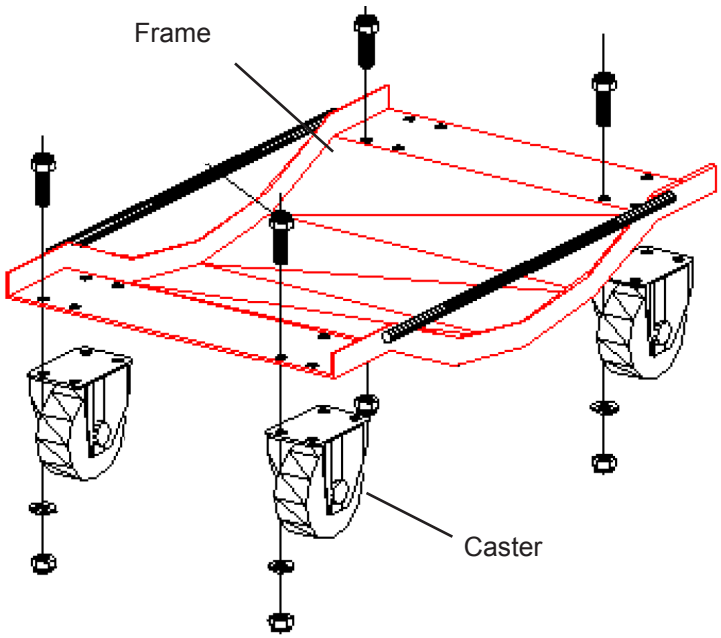

Fig. 1 - Car Dolly Nomenclature

ASSEMBLY

1. Attach 4 casters to dolly frame with provided hardware.
2. Ensure casters swivel freely and are secured to frame prior to use.
3. Repeat Steps 1 & 2 on remaining dolly.

Assembly Drawing

No.	Description	Qty. / Dolly
1	Bolt (M8x16)	16
2	Washer 8	16
3	Nut (M8)	16
4	Caster Assembly	4
5	Frame	1

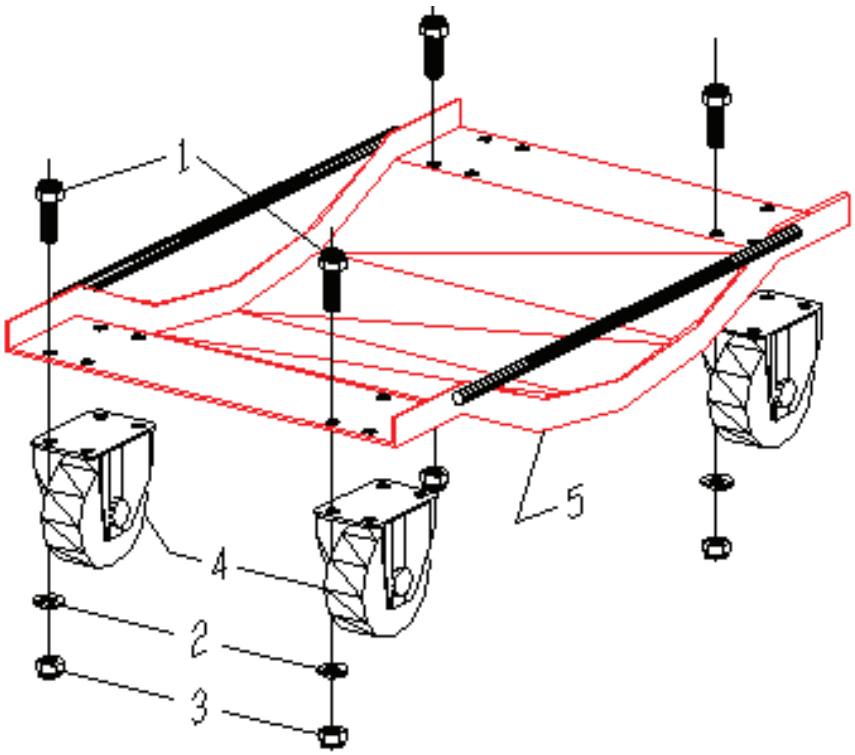

Fig. 3 - Assembly Illustration

OPERATION

1. Safely lift the vehicle with appropriate lifting equipment.
2. Once the vehicle tires are off the ground safely place the pair of wheel dollies under the wheels. Note: Never position self or property beneath a lifted vehicle.
3. With dollies in place, slowly lower vehicle onto dollies.
4. Repeat process for remaining axle.

⚠ WARNING

- Never extend leg extensions beyond factory marked position on each leg.
- Extend each leg extension an equal distance from frame.
- Never extend boom extension beyond furthest distance of leg extensions.
- Failure to heed these markings may result in personal injury and/or property damage.

! SAFETY MESSAGE !

Be sure all tools and personnel are clear before lowering load. No alterations shall be made to this device. Only attachments and/or adapters supplied by the manufacturer shall be used.

MAINTENANCE

Cleaning

Periodically check the frame and casters for signs of rust or corrosion. Clean as needed and wipe with an clean cloth.

Note: Never use sandpaper or abrasive material on these surfaces !

REPLACEMENT PARTS

Replacement parts are not offered for this product.

NOTES: