norco

PROFESSIONAL LIFTING EQUIPMENT

# MODEL 72050B • 1/2 TON CAPACITY • TRANSMISSION JACK
# OPERATING INSTRUCTIONS

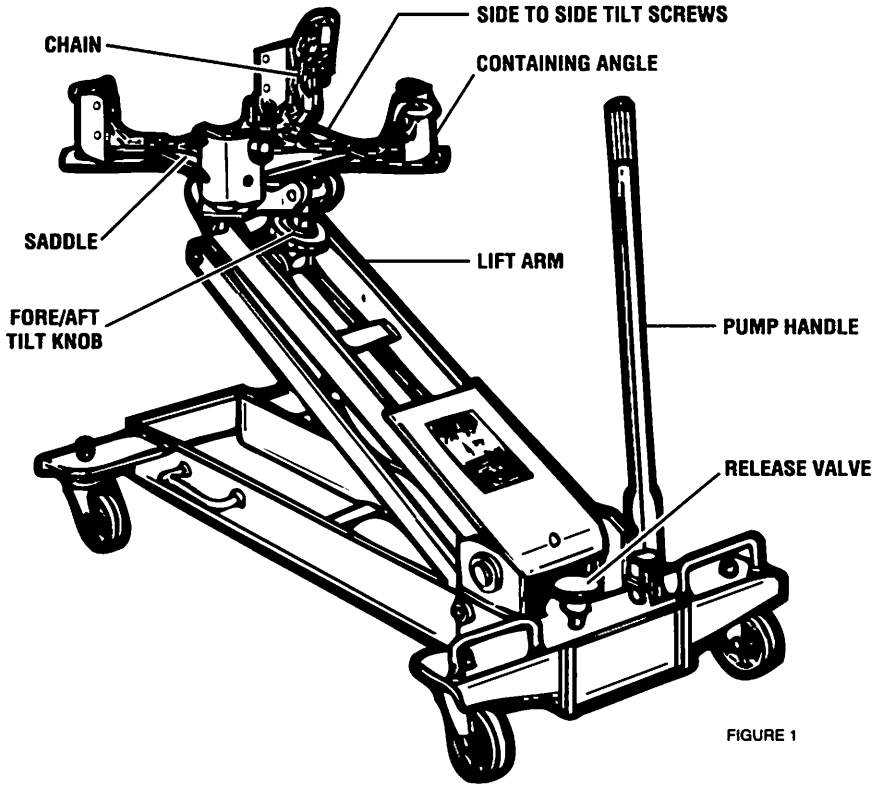


FIGURE 1

**READ, UNDERSTAND AND FOLLOW THESE INSTRUCTIONS BEFORE USING THE TRANSMISSION JACK**

## PURGING AIR FROM THE JACK

The Model 72050B Transmission Jack may become air bound during shipment or if the jack is turned on its side or upside down. You may experience the air bound condition if the hydraulic unit does not function properly during the pumping operation.

Follow these steps:

Step 1. Make sure the lift arm is in the down position.

Step 2. Open the release valve by turning it counter-clockwise two full turns.

Step 3. Pump the jack handle approximately 10 full strokes.

Step 4. Close the release valve by turning it clockwise until it stops. The jack should pump normally at this time.

## PREPARING THE JACK FOR USE

Install the containing angles on the saddle as shown in fig. 1.

The chains and corresponding chain hardware are provided in order to secure the transmission to the saddle before removal or installation. One end of each chain should be anchored to its own containing angle using the chain hardware provided.

## PREPARING THE VEHICLE FOR TRANSMISSION REMOVAL OR INSTALLATION

**NOTE: The entire vehicle must be lifted and supported above the floor so there is enough space for the jack with transmission to clear the vehicle.**

**WARNING: BEFORE LIFTING ANY VEHICLE MAKE SURE THE VEHICLE IS UNABLE TO ROLL. AUTOMATIC TRANSMISSIONS SHOULD BE IN "PARK". MANUAL TRANSMISSIONS SHOULD BE PUT IN GEAR. BOTH TRANSMISSIONS SHOULD HAVE THE EMERGENCY BRAKE ON. USE WHEEL CHOCKS FOR ADDED SAFETY.**

Step 1. Raise the rear of the vehicle and position vehicle support stands under the axle so the bottom of the axle is approximately 24" off the floor.

Step 2. Raise the front of the vehicle until it appears level and support the front end by using vehicle support stands under the front axle or spring pads.

Step 3. Make sure the jack with transmission will clear the car before any work is done.

**WARNING: MAKE SURE THE SETUP IS STABLE AND SAFE BEFORE GETTING UNDER THE VEHICLE OR PERFORMING ANY WORK ON THE VEHICLE. FOR YOUR SAFETY: USE VEHICLE SUPPORT STANDS (JACK STANDS) TO SUPPORT THE VEHICLE BEFORE GETTING UNDER IT.**

## OPERATING THE TRANSMISSION JACK

### Lowering the Load

Step 1. Do not use this jack beyond its rated capacity or for purposes other than what were intended.

Step 2. The release valve must be opened slowly by rotating it in a counter-clockwise direction in order to lower the load. Lowering can be controlled by slightly opening the release valve and then shutting it off. This may be executed incrementally.

### Raising the Load

Step 1. Make sure the load to be raised is positioned properly and securely attached to the saddle with the chain and chain hardware provided.

Step 2. In order to raise a load, the release valve must be closed by rotating it in a clockwise direction until it stops.

Step 3. The pump handle swivels 360°, however you must choose the most convenient position and make sure the up and down pump handle stroke will not be obstructed by any part of the vehicle.

Step 4. Pumping the jack does not require lifting the pump handle to maximum height. Maximum lifting per incremental pump stroke can be accomplished when you lift the pump handle to its maximum height and then push it all the way down. The shorter the incremental pump stroke, the shorter the incremental lift of the saddle.

### Saddle Adjustment

Step 1. Once the load is centered and positioned near the saddle, the four containing angles can be slid into a position where the transmission oil pan flange will rest on top of the angles. The containing angles must be secured to the saddle by tightening the hex bolts. Now gently lower the transmission oil pan flange on top of the containing angles.

Step 2. The chains should be anchored to the two containing angles on one side. The loose ends of the chain should be pulled over the top of the transmission and be secured to the two remaining containing angles on the opposite side of the saddle. The chains should be tight.

Step 3. Fore and aft saddle tilt adjustments are sometimes necessary to properly position the transmission on the saddle or for alignment with the engine. You may turn the fore/aft tilt knob by hand or by using an adjustable or open end wrench.

Step 4. Side to side tilt adjustments may also be necessary for transmission positioning or alignment. You may turn the bolts located under the saddle with your fingers, adjustable or 3/4" open end wrench to accomplish side to side saddle adjustments.

### Removing the Transmission

Step 1. Place the transmission jack under the vehicle with the saddle facing the front of the vehicle and the pump handle facing the rear.

Step 2. Pump the jack so the saddle is close to the transmission oil pan. You may now follow the instructions for "SADDLE ADJUSTMENT".

Step 3. Proceed with the removal of the transmission in accordance with the vehicle manufacturer's instructions.

### Installing the Transmission

Step 1. After removal of the transmission it is recommended to keep the transmission jack saddle adjustment the same. This will help in reinstalling the transmission into its proper position.

Step 2. Proceed with the installation of the transmission in accordance with the vehicle manufacturer's instructions.

---

## MAINTENANCE INSTRUCTIONS

1. Lubricate the jack frequently. A medium weight lubricating grease should be used on all external moving parts such as bearing sufaces, pivot points and control screws.

2. Do not use this jack as a wash rack when washing or steam cleaning transmissions.

## SERVICE

In the event the jack becomes inoperable or a part is damaged you may obtain service information or replacement parts by contacting the Norco Customer Service Department, 365 W. Victoria Street, Compton, California 90220, (800) 347-2232.

**IMPORTANT: IF YOU NOTICE AN EXTERNAL OIL LEAK, OTHER THAN NORMAL OPERATING CONDITIONS OR A WORN PART, IMMEDIATELY DISCONTINUE USE OF THE JACK AND CONTACT THE NORCO CUSTOMER SERVICE DEPT. FOR FURTHER INSTRUCTIONS.**

norco
PROFESSIONAL LIFTING EQUIPMENT
A DIVISION OF NORCO INDUSTRIES, INC. 310-639-4000

*FACTORY AND MAIN WAREHOUSE*
Compton, CA
*BRANCH WAREHOUSES*
Atlanta, Georgia • Elkhart, Indiana • Fort Worth, Texas • Seattle / Tacoma, Washington

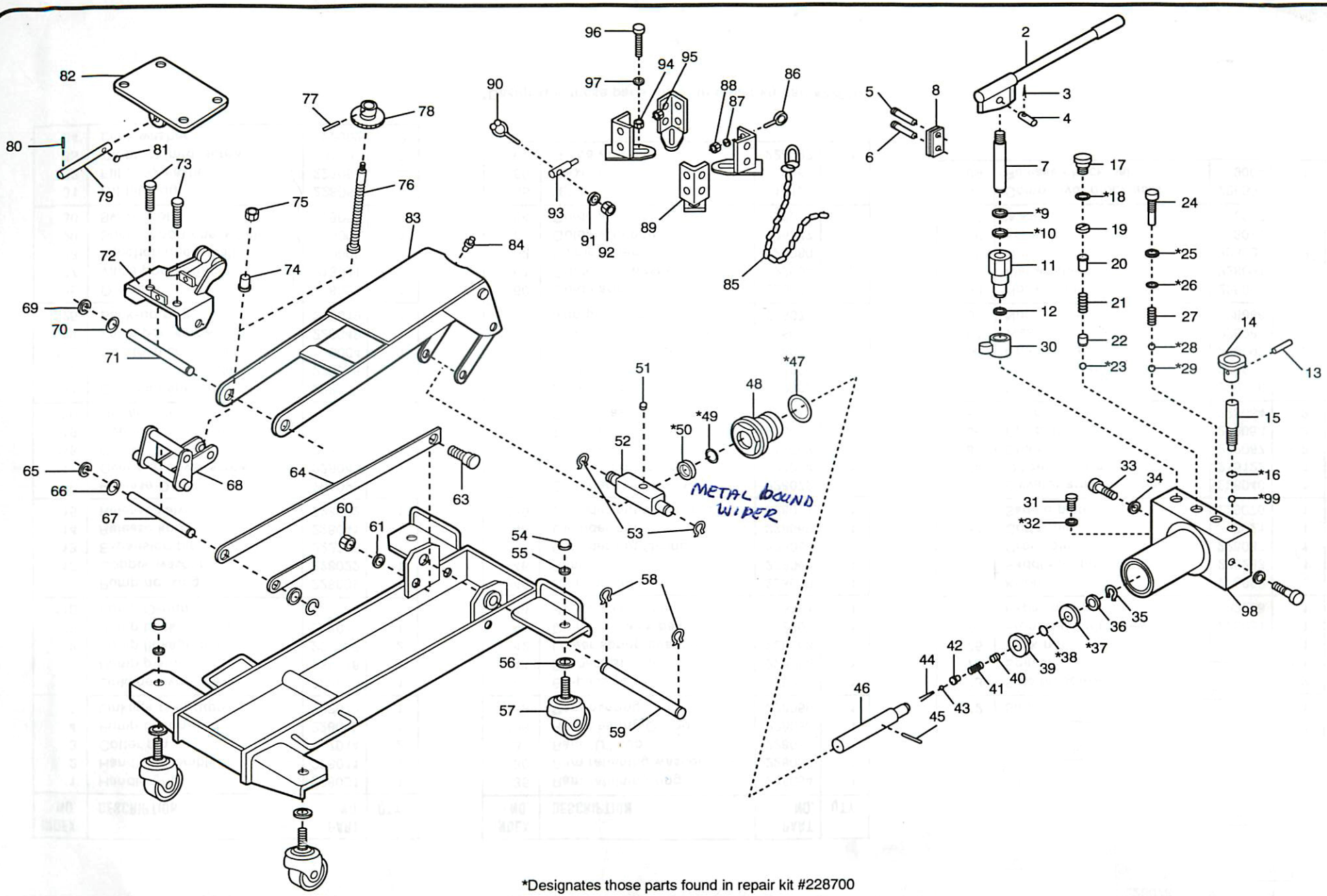


*Designates those parts found in repair kit #228700

| REPLACEMENT PARTS | MODEL NO. | CAPACITY | DESCRIPTION |
|---|---|---|---|
| | 72050B | 1/2 TON | HYDRAULIC TRANSMISSION JACK |

norco®

| INDEX NO. | DESCRIPTION | PART NO. | QTY. |
|---|---|---|---|
| 1 | Handle grip | 228001 | 1 |
| 2 | Handle assembly | 228011 | 1 |
| 3 | Cotter pin | 7014 | 2 |
| 4 | Pump piston rivet | 228012 | 1 |
| 5 | Linkage rivet (upper) | 228013 | 1 |
| 6 | Linkage rivet (lower) | 228014 | 1 |
| *7 | Pump piston | 228016 | 1 |
| 8 | Pump linkage bar | 228107 | 2 |
| *9 | Pump back-up ring | 228018 | 1 |
| *10 | Pump O-ring | 1 | |
| 11 | Pump housing | 228039 | 1 |
| 12 | Copper washer | 228022 | 1 |
| 13 | Expansion pin | 222228 | 1 |
| 14 | Release knob | 228041 | 1 |
| 15 | Release valve | 228042 | 1 |
| *16 | Release O-ring | 201092 | 1 |
| 17 | Overload cover screw | 228043 | 1 |
| *18 | O-ring | 218012 | 1 |
| 19 | Overload adjustment screw | 1 | |
| 20 | Upper spring guide | 1 | |
| 21 | Overload spring | 228047 | 1 |
| 22 | Lower spring guide | 228048 | 1 |
| *23 | Overload check ball | 9004 | 1 |
| 24 | Valve port screw | 228049 | 1 |
| *25 | Back-up ring | 218019 | 1 |
| *26 | O-ring | 218021 | 1 |
| 27 | Valve port spring | 218041 | 1 |
| *28 | Injection check ball | 9008 | 1 |
| *29 | Suction port check ball | 9004 | 1 |
| 30 | Swivel collar | 228051 | 1 |
| 31 | Oil fill plug | 228052 | 1 |
| *32 | Fill plug washer | 228053 | 1 |
| 33 | Oil block mtg. screw | 31003 | 2 |
| 34 | Lock washer | 22002 | 2 |

| INDEX NO. | DESCRIPTION | PART NO. | QTY. |
|---|---|---|---|
| 35 | Ram retaining ring | 228054 | 1 |
| 36 | Ram retaining washer | 228056 | 1 |
| *37 | Ram "U" cup | 228057 | 1 |
| *38 | Ram bearing O-ring | 228058 | 1 |
| 39 | Ram bearing | 228059 | 1 |
| 40 | By-pass screw | 228061 | 1 |
| 41 | By-pass spring | 228062 | 1 |
| 42 | Lower spring adapter | 228063 | 1 |
| 43 | By-pass check ball | 9004 | 1 |
| 44 | By-pass valve pin | 228064 | 1 |
| 45 | By-pass limit pin | 228066 | 1 |
| 46 | Ram | 228067 | 1 |
| *47 | Cylinder nut O-ring | 228068 | 1 |
| 48 | Cylinder nut | 228069 | 1 |
| *49 | Cylinder nut wiper ring | 228071 | 1 |
| *50 | Cylinder nut oil seal | 228072 | 1 |
| 51 | Trunion cotter pin | 27004 | 1 |
| 52 | Trunion | 215063 | 1 |
| 53 | Trunion "E" ring | 215076 | 2 |
| 54 | Caster castle nut | 228073 | 4 |
| 55 | Lock washer | 22002 | 4 |
| 56 | Caster washer | 228026 | 4 |
| 57 | Caster wheel assembly | 228075 | 4 |
| 58 | Elevator arm snap ring | 215073 | 2 |
| 59 | Arm pivot pin | 228074 | 1 |
| 60 | Guide arm nut | 228076 | 2 |
| 61 | Guide arm washer | 22004 | 2 |
| 62 | Frame assembly | 228080 | 1 |
| 63 | Guide arm bolt | 228077 | 2 |
| 64 | Guide arm | 228031 | 2 |
| 65 | "E" ring | 12121 | 2 |
| 66 | Washer | 2068 | 2 |
| 67 | Guide arm pin | 228032 | 1 |

| INDEX NO. | DESCRIPTION | PART NO. | QTY. |
|---|---|---|---|
| 68 | Saddle base support | 228085 | 1 |
| 69 | "E" ring | 12121 | 2 |
| 70 | Washer | 228033 | 2 |
| 71 | Elevator arm pin | 228034 | 2 |
| 72 | Saddle base | 228090 | 1 |
| 73 | Side tilt screw | 228078 | 2 |
| 74 | Spacer | 228036 | 1 |
| 75 | Lock nut | 228079 | 1 |
| 76 | Front/back tilt screw | 228081 | 1 |
| 77 | Expansion pin | 222228 | 1 |
| 78 | Knob | 228082 | 1 |
| 79 | Saddle tilt pin | 228233 | 1 |
| 80 | Cross pin | 228037 | 1 |
| 81 | Cotter pin | 7021 | 1 |
| 82 | Saddle plate | 228070 | 1 |
| 83 | Elevator arm assembly | 228040 | 1 |
| 84 | Oil zerk fitting | 215122 | 1 |
| 85 | Chain | 282067 | 2 |
| 86 | Eye bolt | 228083 | 2 |
| 87 | Washer | 228084 | 2 |
| 88 | Nut | 228086 | 2 |
| 89 | Containing angle | 228231 | 4 |
| 90 | Chain hook | 228093 | 2 |
| 91 | Washer | 228087 | 2 |
| 92 | Nut | 228088 | 2 |
| 93 | Hook guide | 228089 | 2 |
| 94 | Flat washer | 228091 | 2 |
| 95 | Nut | 228092 | 2 |
| 96 | Screw | 3072 | 4 |
| 97 | Washer | 2017 | 4 |
| 98 | Comp. hyd. block assy. | 228300 | 1 |
| *99 | Release check ball | 9004 | 1 |

*Designates those parts found in repair kit part #228700.