This .pdf document is bookmarked

Operating Instructions and Parts Manual
Hydraulic Shop Presses
Models HP-5A/15A/35A

Model HP-35A shown

JET
427 New Sanford Road
LaVergne, Tennessee 37086
Ph.: 800-274-6848
www.jettools.com

Part No. M-331406
Revision C1 09/2014
Copyright © 2014 JET

1.0 **Warranty and Service**

JET® warrants every product it sells against manufacturers' defects. If one of our tools needs service or repair, please contact Technical Service by calling 1-800-274-6846, 8AM to 5PM CST, Monday through Friday.

Warranty Period
The general warranty lasts for the time period specified in the literature included with your product or on the official JET branded website.

- JET products carry a limited warranty which varies in duration based upon the product. (See chart below)
- Accessories carry a limited warranty of one year from the date of receipt.
- Consumable items are defined as expendable parts or accessories expected to become inoperable within a reasonable amount of use and are covered by a 90 day limited warranty against manufacturer's defects.

Who is Covered
This warranty covers only the initial purchaser of the product from the date of delivery.

What is Covered
This warranty covers any defects in workmanship or materials subject to the limitations stated below. This warranty does not cover failures due directly or indirectly to misuse, abuse, negligence or accidents, normal wear-and-tear, improper repair, alterations or lack of maintenance. JET woodworking machinery is designed to be used with Wood. Use of these machines in the processing of metal, plastics, or other materials may void the warranty. The exceptions are acrylics and other natural items that are made specifically for wood turning.

Warranty Limitations
Woodworking products with a Five Year Warranty that are used for commercial or industrial purposes default to a Two Year Warranty. Please contact Technical Service at 1-800-274-6846 for further clarification.

How to Get Technical Support
Please contact Technical Service by calling 1-800-274-6846. **Please note that you will be asked to provide proof of initial purchase when calling.** If a product requires further inspection, the Technical Service representative will explain and assist with any additional action needed. JET has Authorized Service Centers located throughout the United States. For the name of an Authorized Service Center in your area call 1-800-274-6846 or use the Service Center Locator on the JET website.

More Information
JET is constantly adding new products. For complete, up-to-date product information, check with your local distributor or visit the JET website.

How State Law Applies
This warranty gives you specific legal rights, subject to applicable state law.

Limitations on This Warranty
JET LIMITS ALL IMPLIED WARRANTIES TO THE PERIOD OF THE LIMITED WARRANTY FOR EACH PRODUCT. EXCEPT AS STATED HEREIN, ANY IMPLIED WARRANTIES OF MERCHANTABILITY AND FITNESS FOR A PARTICULAR PURPOSE ARE EXCLUDED. SOME STATES DO NOT ALLOW LIMITATIONS ON HOW LONG AN IMPLIED WARRANTY LASTS, SO THE ABOVE LIMITATION MAY NOT APPLY TO YOU.
JET SHALL IN NO EVENT BE LIABLE FOR DEATH, INJURIES TO PERSONS OR PROPERTY, OR FOR INCIDENTAL, CONTINGENT, SPECIAL, OR CONSEQUENTIAL DAMAGES ARISING FROM THE USE OF OUR PRODUCTS. SOME STATES DO NOT ALLOW THE EXCLUSION OR LIMITATION OF INCIDENTAL OR CONSEQUENTIAL DAMAGES, SO THE ABOVE LIMITATION OR EXCLUSION MAY NOT APPLY TO YOU.

JET sells through distributors only. The specifications listed in JET printed materials and on official JET website are given as general information and are not binding. JET reserves the right to effect at any time, without prior notice, those alterations to parts, fittings, and accessory equipment which they may deem necessary for any reason whatsoever. JET® branded products are not sold in Canada by JPW Industries, Inc.

Product Listing with Warranty Period

90 Days – Parts; Consumable items; Light-Duty Air Tools
1 Year – Motors; Machine Accessories; Heavy-Duty Air Tools; Pro-Duty Air Tools
2 Year – Metalworking Machinery; Electric Hoists, Electric Hoist Accessories; Woodworking Machinery used for industrial or commercial purposes
5 Year – Woodworking Machinery
Limited Lifetime – JET Parallel clamps; VOLT Series Electric Hoists; Manual Hoists; Manual Hoist Accessories; Shop Tools; Warehouse & Dock products; Hand Tools

NOTE: JET is a division of JPW Industries, Inc. References in this document to JET also apply to JPW Industries, Inc., or any of its successors in interest to the JET brand.

2.0 **Table of Contents**

Section **Page**

1.0 Warranty and Service 2
2.0 Table of Contents 3
3.0 Safety warnings 4
4.0 Specifications 5
5.0 Features and Terminology 6
6.0 Assembly 7
7.0 Operation 7
8.0 Maintenance 7
9.0 Replacement Parts 7
9.1.1 HP-5A Head Assembly – Exploded View 8
9.1.2 HP-5A Head Assembly – Parts List 9
9.2.1 HP-5A Frame Assembly – Exploded View 10
9.2.2 HP-5A Frame Assembly – Parts List 11
9.3.1 HP-15A Head Assembly – Exploded View 12
9.3.2 HP-15A Head Assembly – Parts List 13
9.4.1 HP-15A Frame Assembly – Exploded View 15
9.4.2 HP-15A Frame Assembly – Parts List 16
9.5.1 HP-35A Head Assembly – Exploded View 17
9.5.2 HP-35A Head Assembly – Parts List 18
9.6.1 HP-35A Frame Assembly – Exploded View 20
9.6.2 HP-35A Frame Assembly – Parts List 21

3.0 **Safety warnings**

1. Read and understand all safety warnings on the machine and in this manual.
2. Replace warning labels if they become obscured or removed.
3. This press is designed and intended for use by properly trained and experienced personnel only. If you are not familiar with the proper and safe operation of a hydraulic press, do not use until proper training and knowledge have been obtained.
4. Do not operate this press beyond its rated capacity. Use pressure gauge to determine load.
5. This press is designed for pressing, bending, and straightening purposes only.
6. Keep hands away from pressing area and pinch points.
7. Do not operate this tool while tired or under the influence of drugs, alcohol or any medication.
8. Check the press for loose or damaged parts before each operation. Replace damaged parts and tighten all loose bolts before operating. Components are designed to withstand the rated capacity of the press – do not substitute components.
9. Make sure workpiece is center-loaded and secure on the bed before pressing.
10. Always apply load at center of ram.
11. Remove workpiece from table before attempting to raise or lower table.
12. Some parts being pressed may have a tendency to be ejected from the press or explode under pressure. Protect yourself accordingly, and do not allow bystanders near the machine.
13. Use good quality hydraulic pump oil only. Do not use brake fluid or other improper types.
14. Do not use tube extensions on the pump handle.
15. Always wear approved safety glasses/face shields and personal safety equipment. (Everyday eyeglasses only have impact resistant lenses; they are *not* safety glasses.)
16. Failure to comply with these warnings may result in serious injury and/or damage to property.

4.0 **Specifications**

Model Number	**HP-5A**	**HP-15A**	**HP-35A**
Stock Number	331406	331416	331431
Capacity (ton)	5	15	35
Ram Diameter (in.)	1-3/4	2-1/2	3
Piston Stroke (in.)	4	4-1/2	4-3/4
Screw Stroke (in.)	3	3-1/8	4
Work Table (in.)	19 x 5-1/2	24-3/4 x 7-1/2	31 x 10-3/8
Lateral Movement (in.)	NA	10-3/16	15
Vertical Travel (in.)	18-3/4	22-3/16	23-5/8
Base Size (in.)	23-1/2 x 26	33-7/8 x 29-1/2	43-1/2 x 55-1/2
Height (in.)	51-1/2	65	68
Hydraulic oil capacity (mL)	216	553	1350
Net Weight (lbs.)	154	431	704

The specifications in this manual were current at time of publication, but because of our policy of continuous improvement, JET reserves the right to change specifications at any time and without prior notice, without incurring obligations.

5.0 **Features and Terminology**

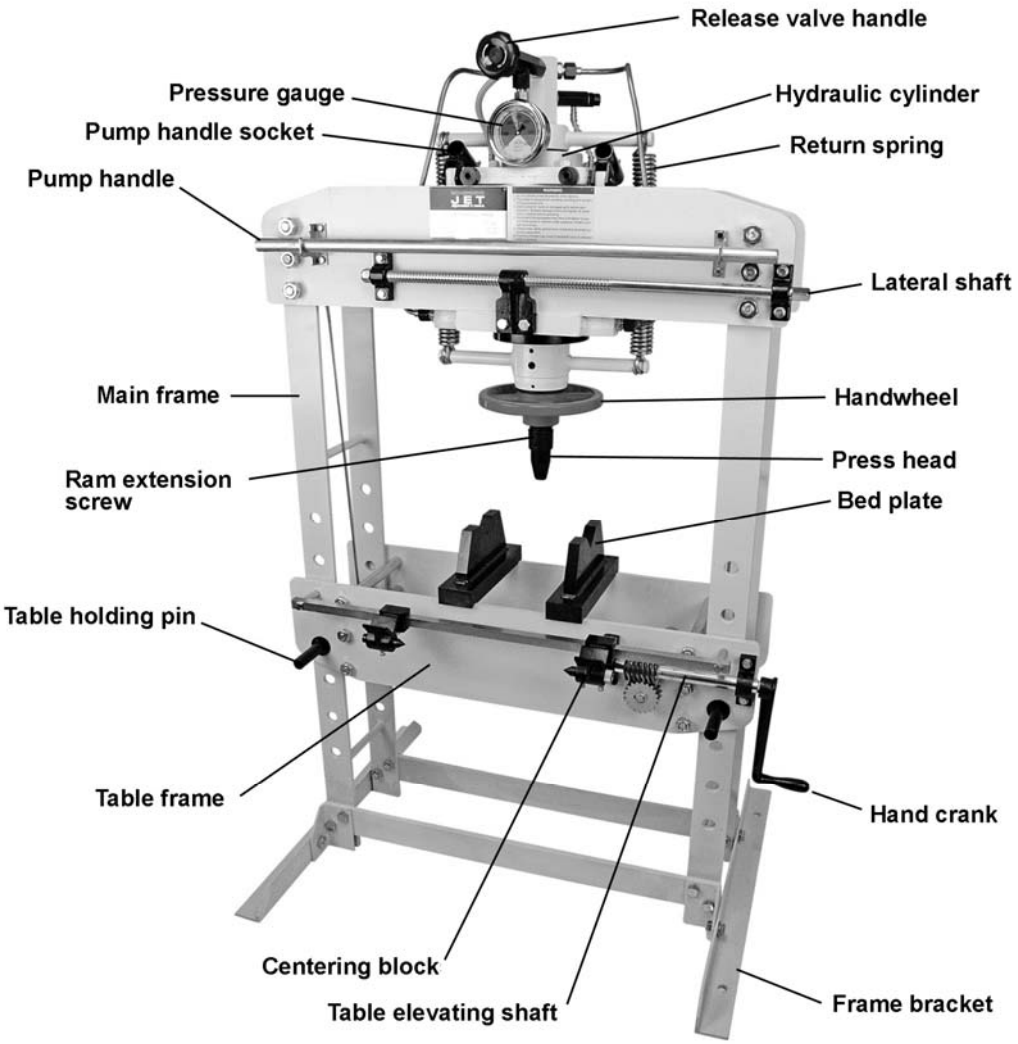

Figure 1
Model HP-35A shown as representative; other models may vary

6.0 **Assembly**

Refer to Figure 1 for identification.

1. Use a lifting device, such as a hoist or forklift with straps, to position machine upright.
2. Bolt the frame brackets to the main frame with the provided screws and hex nuts. *Finger tighten only.*
3. The press should be placed within a well-lit area, upon a level floor, preferably concrete. Lower the press onto the floor, allowing it to stabilize on the brackets. Fully tighten the hex nuts on the frame brackets.
4. The hex filler plug (see parts breakdown: item #17 for HP-5A; #8A for HP-15A; #8D for HP-35A) was installed for shipping purposes. Remove this and replace it with the provided vented plug.
5. Place the end of the pump handle into the handle socket, and secure it with the screw.

7.0 **Operation**

Refer to Figure 1 for identification.

1. Remove all items from bed plates.
2. Remove table holding pins. (Support the table frame on the HP-5A.)
3. Raise or lower table frame to desired position, so that when workpiece is mounted, it will be close to the ram press head.

   Model HP-5A: Raise or lower table frame by hand.

   Models HP-15A,-35A: Rotate crank handle to raise or lower table frame.
4. Re-insert table holding pins. Pins must be fully engaged through front and back holes of the frame.
5. Place workpiece onto bed plates.

⚠WARNING Make sure workpiece is center-loaded and secure before pressing, and that table holding pins are properly inserted. Some objects may have a tendency to pop out or explode under pressure. Exercise proper precautions.

6. If desired, slide ram assembly laterally (15- and 35-ton models only) by mounting the hand crank onto the lateral shaft and rotating it. **Do not attempt to slide ram during operation.**
7. The handwheel can be used to rapidly adjust the ram extension screw into or out of the plunger.

   Note: The length of ram screw extending out of the piston should be kept as short as possible. Raise the table rather than extend the screw to its travel limit.
8. Close valve by rotating release valve handle clockwise as far as it will turn.
9. Pump the handle to lower the ram until it makes light contact with workpiece. Align the workpiece to ensure that desired contact point is directly beneath the press head. Slowly pump handle again until load begins to be applied to workpiece.
10. Remove your hand from workpiece area and step toward the side of the press (do not stand directly in front of workpiece). Continue slowly pumping to complete the operation.
11. When operation is complete, slowly retract ram by incrementally turning release valve handle counter-clockwise.

8.0 **Maintenance**

- Keep the press clean, and periodically lubricate joints and moving parts with light oil.
- Inspect the press before each use, for signs of damage, bent pins, missing or loose bolts, cracked welds, oil leaks, abnormal operation, and the like. Make repairs or replacements as needed before putting the machine back into service.
- Periodically remove filler plug (#17/HP-5A; #8A/HP-15A; #8D/HP-35A) to check that hydraulic cylinder is filled with oil. Top off as needed with good quality hydraulic oil. Reinsert filler plug.
- Flush and replace the oil in the hydraulic cylinder approximately every 2 years. Refer to *section 4.0 Specifications* for oil capacity for your particular model.

9.0 **Replacement Parts**

To order parts or reach our service department, call 1-800-274-6848, Monday through Friday (see our website for business hours, www.jettools.com). Having the Model Number and Serial Number of your machine available when you call will allow us to serve you quickly and accurately.

9.1.1 **HP-5A Head Assembly – Exploded View**

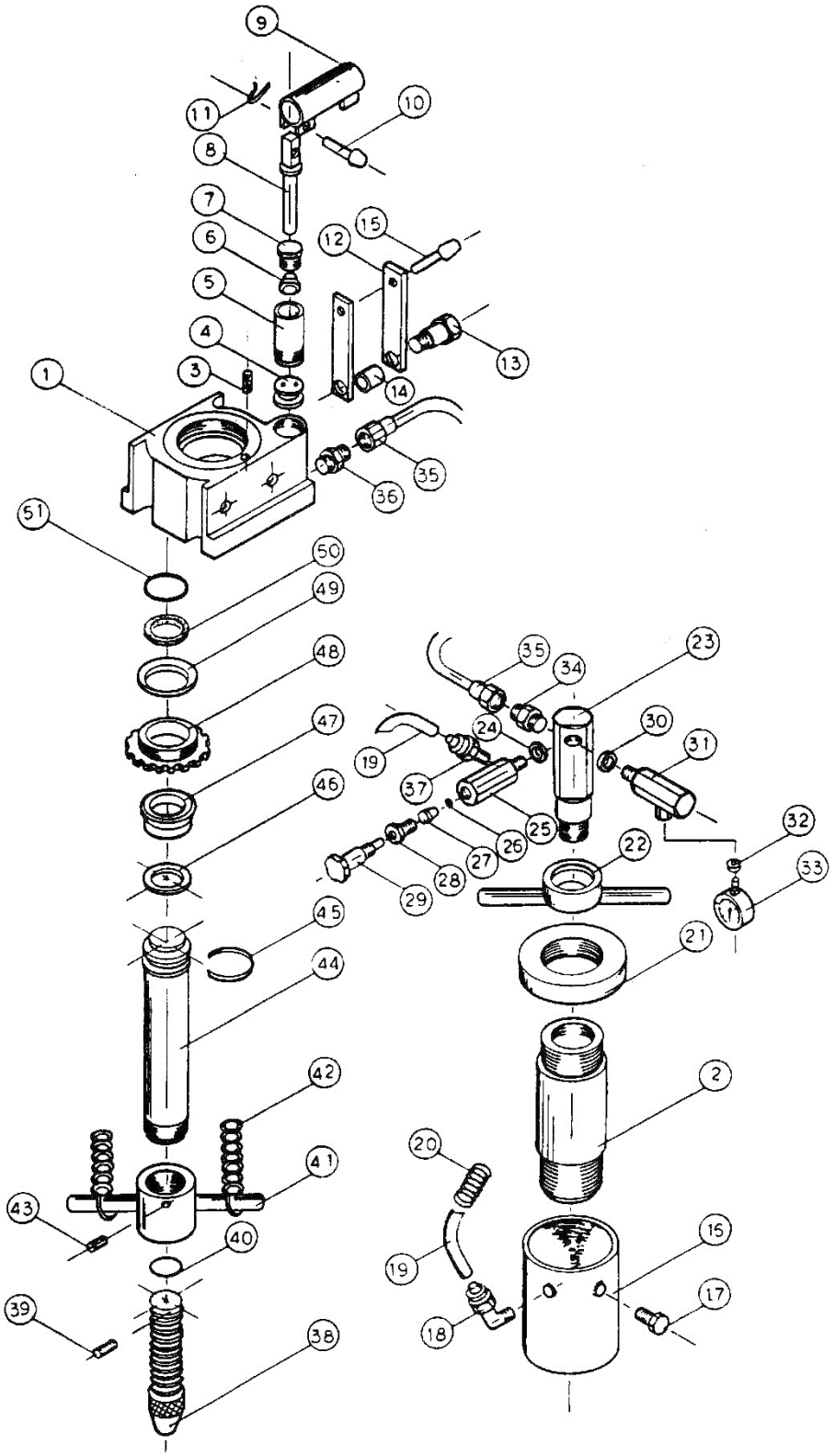

9.1.2 **HP-5A Head Assembly – Parts List**

Index No.	Part No.	Description	Size	Qty
1	HP5A-1	Hydraulic Base		1
2	HP5A-2	Cylinder		1
3	HP5A-3	Base Filter **		1
4	HP5A-4	Single Action Valve		1
5	HP5A-5	Pump Cylinder		1
6	HP5A-6	Cup Seal **		1
7	HP5A-7	Release Valve Assembly		1
8	HP5A-8	Pin		1
9	HP5A-9	Handle Socket		1
10	HP5A-10	Bolt		1
11	HP5A-11	C-Clip		1
12	HP5A-12	Linking Sleeve		1
13	HP5A-13	Fixed Screw		2
14	HP5A-14	Spacer		1
15	HP5A-15	Bolt		1
16	HP5A-16	Reservoir		1
17	HP5A-17	Hex Filler Plug w/Seal **		2
18	HP5A-18	Brass Tube Connector **		1
19	HP5A-19	Plastic Tube **		1
20	HP5A-20	Spring **		1
21	HP5A-21	Top Base		1
22	HP5A-22	Spring Top Holder		1
23	HP5A-23	Oil Pass Connector		1
24	HP5A-24	Washer **		1
25	HP5A-25	Release Valve Block		1
26	HP5A-26	Steel Ball **		1
27	HP5A-27	Rubber Spacer		1
28	HP5A-28	Release Valve Assembly		1
29	HP5A-29	Release Valve Spindle		1
30	HP5A-30	Washer **		1
31	HP5A-31	Release Valve Block		1
32	HP5A-32	Washer **		1
33	HP5A-33	Pressure Gauge		1
34	HP5A-34	Male Connect Tube		1
35	HP5A-35	Bronze Tube		1
36	HP5A-36	Male Connector		1
37	HP5A-37	Brass Tube Connector **		1
38	HP5A-38	Extension Screw		1
39	HP5A-39	Stopper Roll Pin		1
40	HP5A-40	Stopper **		1
41	HP5A-41	Connector Post		1
42	HP5A-42	Return Spring		2
43	TS-0270031	Set Screw	5/16”-18 x 3/8”	1
44	HP5A-44	Plunger		1
45	HP5A-45	Support Ring **		1
46	HP5A-46	Support Seal **		1
47	HP5A-47	Cup Seal **		1
48	HP5A-48	Plug Nut		1
49	HP5A-49	Gasket **		1
50	HP5A-50	Oil Absorber **		1
51	HP5A-51	Seal		1
	HP5A-RK	Repair Kit (includes items marked with **)		

9.2.1 **HP-5A Frame Assembly – Exploded View**

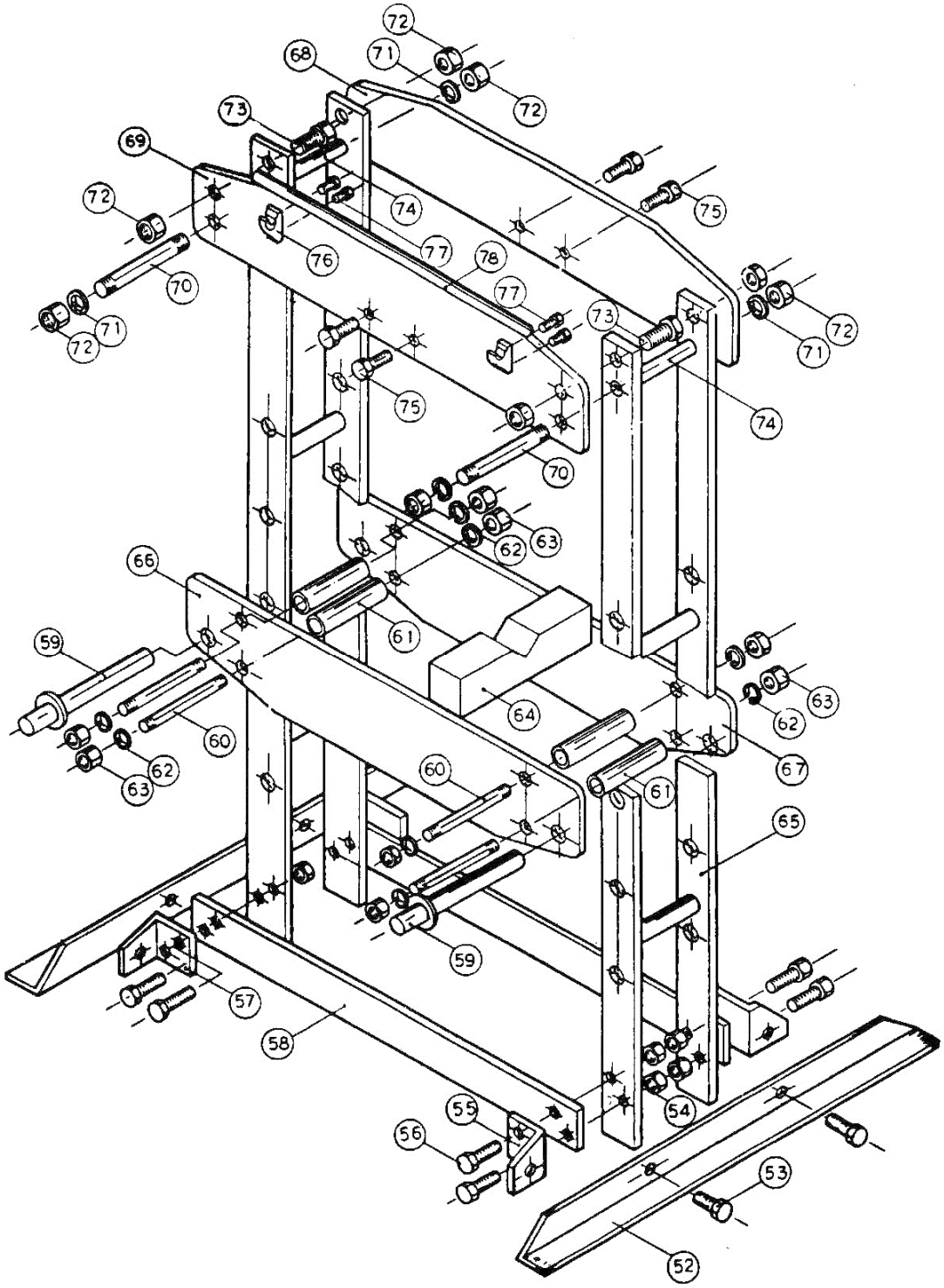

9.2.2 **HP-5A Frame Assembly – Parts List**

Index No.	Part No.	Description	Size	Qty
52	HP5A-52	Frame Bracket		2
53	TS-0060051	Hex Cap Screw	3/8”-16 x 1”	4
54	TS-0561031	Hex Nut	3/8”-16	12
55	HP5A-55	Frame Base Bracket		2
56	TS-0060071	Hex Cap Screw	3/8”-16 x 1-1/2”	8
57	HP5A-57	Frame Base Bracket		2
58	HP5A-58	Lower Frame Support		2
59	HP5A-59	Table Holder Pin		2
60	HP5A-60	Table Spindle		4
61	HP5A-61	Crank Shaft Sleeve		4
62	TS-0720111	Lock Washer	1/2”	8
63	TS-0561051	Hex Nut	1/2"-13	8
64	HP5A-64	Bed Plate		1
65	HP5A-65	Main Frame (L-R post)		2
66	HP5A-66	Table Frame (Front)		1
67	HP5A-67	Table Frame (Rear)		1
68	HP5A-68	Top Frame (rear)		1
69	HP5A-69	Top Frame (front)		1
70	HP5A-70	Frame Spindle		1
71	TS-0720131	Lock Washer	5/8”	8
72	TS-0561071	Hex Nut	5/8”-11	8
73	TS-0071011	Hex Cap Screw	5/8”-11 x 1-1/2”	4
74	HP5A-74	Spindle Sleeve		2
75	TS-0071011	Hex Cap Screw	5/8”-11 x 1-1/2”	4
76	HP5A-76	Handle Holder		2
77	TS-0081031	Hex Cap Screw	5/16”-18 x 3/4”	4
78	HP5A-78	Pump Handle		1
79	HP5A-ID	Identification Label (not shown)		1
80	HP5A-WL	Warning Label (not shown)		1

9.3.1 **HP-15A Head Assembly – Exploded View**

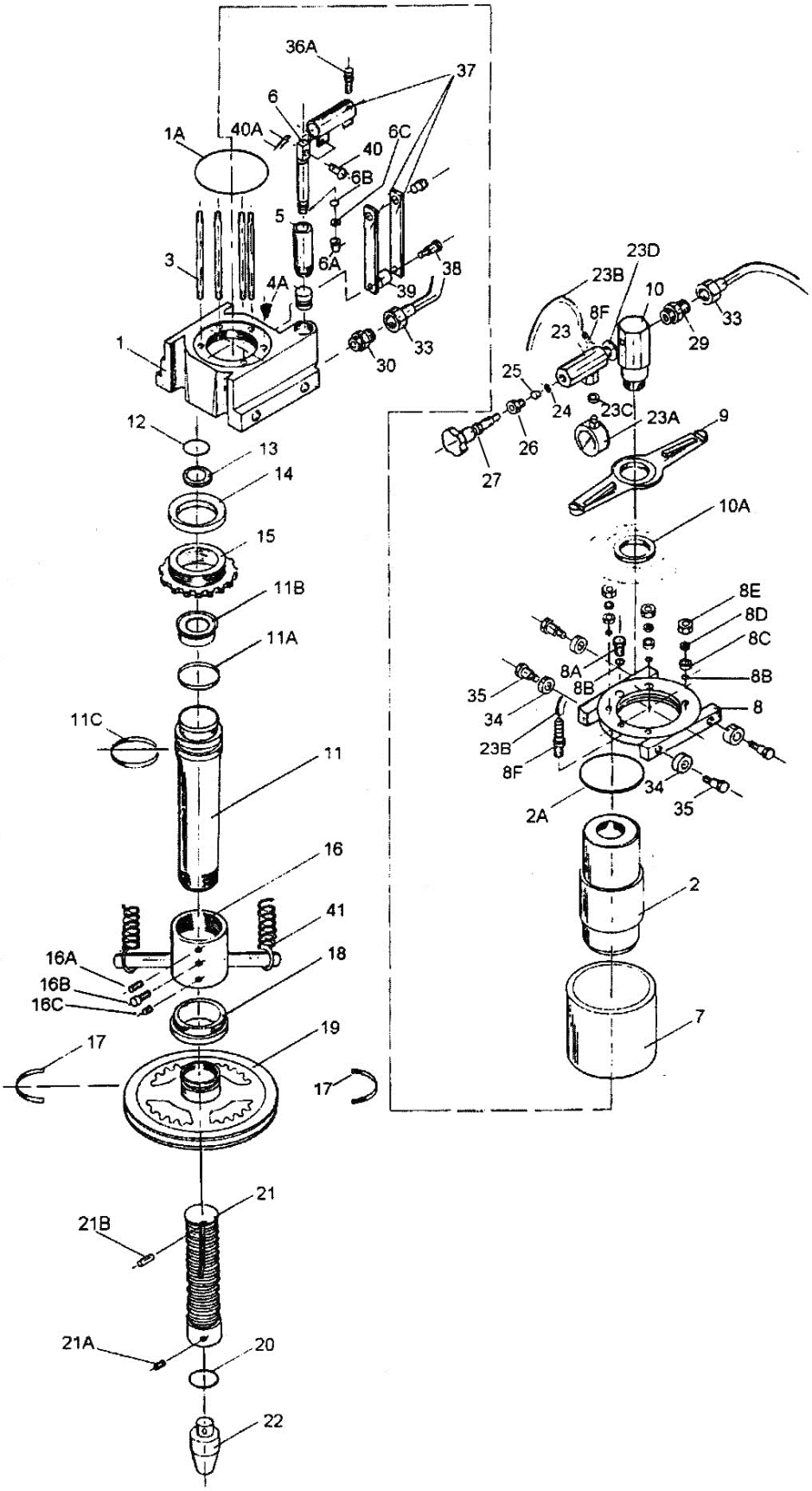

9.3.2 **HP-15A Head Assembly – Parts List**

Index No.	Part No.	Description	Size	Qty
1	HP15A-01	Hydraulic Base		1
1A	HP15A-01A	Base Seal **		1
2	HP15A-02	Cylinder		1
2A	HP15A-02A	Seal **		1
3	HP15A-03	Support Rod		4
4	HP15A-04	Single Action Valve		1
4A	HP15A-04A	Base Filter **		1
5	HP15A-05	Pump Cylinder		1
6	HP15A-06	Piston		1
6A	HP15A-06A	Cup Seal **		1
6B	HP15A-06B	Seal **		1
6C	HP15A-06C	Wiper Seal **		1
7	HP15A-07	Reservoir		1
8	HP15A-08	Top Base		1
8A	HP15A-08A	Hex Filler Plug w/ Seal		1
8B	HP15A-08B	O-Ring **		5
8C	HP15A-08C	Spacer		4
8D	TS-0720091	Lock Washer	3/8”	4
8E	TS-0561031	Hex Nut	3/8”-16	4
8F	HP15A-08F	Brass Tube Connector	1/8PT thread	2
9	HP15A-09	Spring Top Holder		1
10	HP15A-10	Oil Pass Connector		1
10A	HP15A-10A	Spacer		1
11	HP15A-11	Plunger		1
11A	HP15A-11A	Support Seal **		1
11B	HP15A-11B	Cup Seal **		1
11C	HP15A-11C	Support Ring **		1
12	HP15A-12	Seal **		1
13	HP15A-13	Oil Absorber **		1
14	HP15A-14	Gasket **		1
15	HP15A-15	Plug Nut Fixer		1
16	HP15A-16	Connector Post		1
16A	HP15A-16A	Screw		1
16B	HP15A-16B	Screw		1
16C	HP15A-16C	Screw		1
17	HP15A-17	Handwheel Retainer Clip		2
18	HP15A-18	Handwheel Spacer		1
19	HP15A-19	Handwheel		1
20	HP15A-20	Seal		1
21	HP15A-21	Extension Screw		1
21A	HP15A-21A	Set Screw		1
21B	HP15A-21B	Stopper Roll Pin		1
22	HP15A-22	Press Head		1
23	HP15A-23	Release Valve Block		1
23A	HP15A-23A	Pressure Gauge		1
23B	HP15A-23B	Plastic Tube		1
23C	HP15A-23C	Washer		1
23D	HP15A-23D	Spacer		1
24	HP15A-24	Steel Ball		1
25	HP15A-25	Release Valve Seal **		1
26	HP15A-26	Release Valve Nut		1
27	HP15A-27	Release Valve		1
29	HP15A-29	Male Connector		1
30	HP15A-30	Male Connector		1
33	HP15A-33	Bronze Tube		1
34	HP15A-34	Sliding Wheel		4
35	HP15A-35	Locking Screw		4
36A	HP15A-36A	Hand Stopper		1
37	HP15A-37	Complete Handle Sleeve Assembly		1

Index No.	Part No.	Description	Size	Qty
38	HP15A-38	Fixed Screw		1
39	HP15A-39	Spacer		1
40	HP15A-40	Pin		1
40A	HP15A-40A	Cotter Pin		1
41	HP15A-41	Return Spring		2
	HP15A-RKA	Hydraulic Repair Kit (includes items marked with **)		

9.4.1 **HP-15A Frame Assembly – Exploded View**

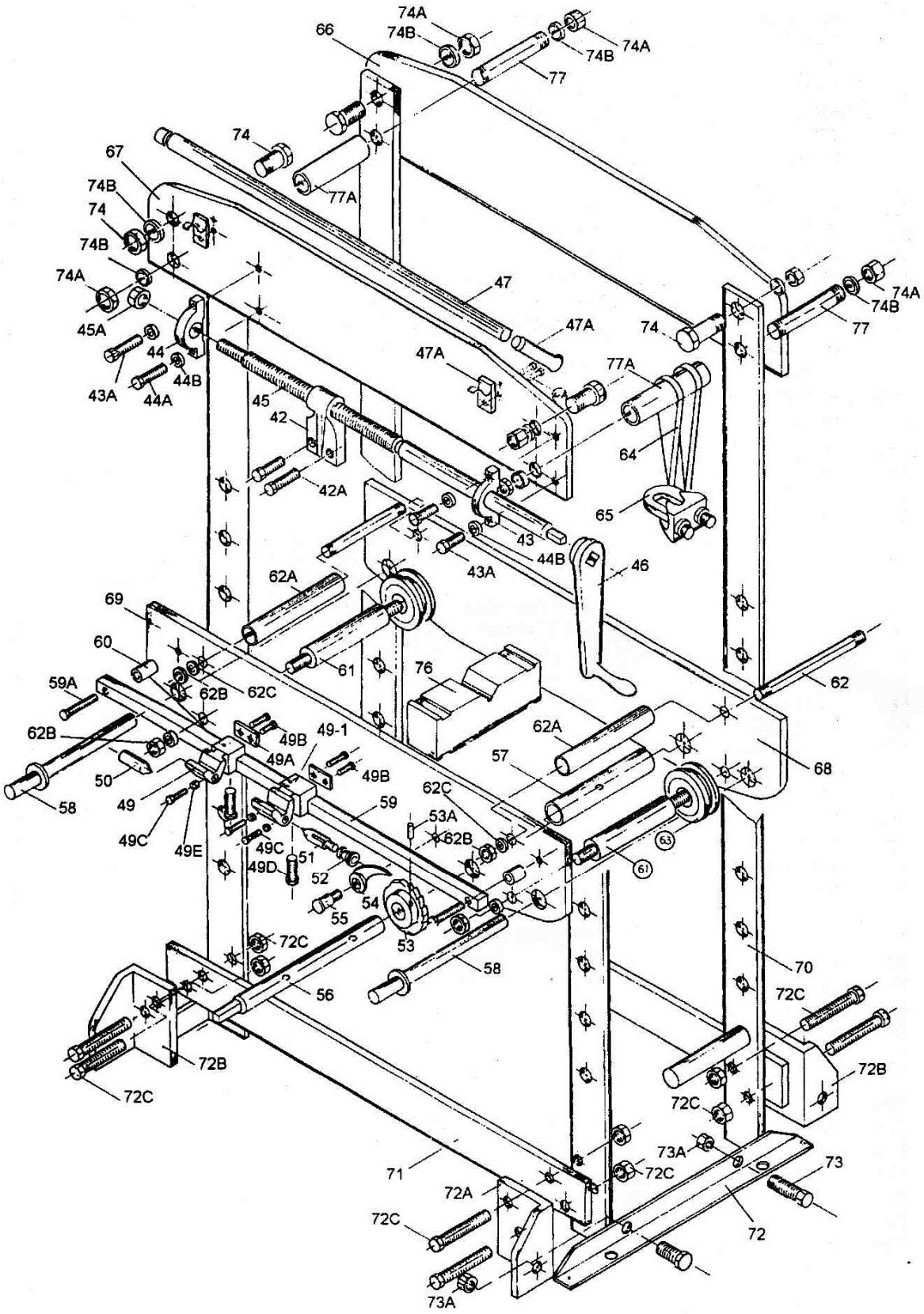

9.4.2 **HP-15A Frame Assembly – Parts List**

Index No.	Part No.	Description	Size	Qty
42	HP15A-42	Shaft Holder		1
42A	TS-0070011	Hex Cap Screw	1/2”-13 x 1”	2
43	HP15A-43	Rolling Shaft Block without Thread		1
43A	TS-0060061	Hex Cap Screw	3/8”-16 x 1-1/4”	3
44	HP15A-44	Rolling Shaft Block with Thread		1
44A	TS-0060051	Hex Cap Screw	3/8”-16 x 1”	1
44B	HP15A-44B	Washer		4
45	HP15A-45	Rolling Shaft		1
45A	HP15A-45A	Nut		2
46	HP15A-46	Hand Crank		1
47	HP15A-47	Pump Handle		1
47A	HP15A-47A	Rubber Grip		1
48	HP15A-48	Handle Holder		2
48A	HP15A-48A	Handle Holder Screw		2
49	HP15A-49	V-Block Body		1
49A	HP15A-49A	Body Sliding Plate		2
49-1	HP15A-49-1	V-Block Body		1
49B	HP15A-49B	Body Sliding Plate		2
49C	HP15A-49C	Hex Screw		4
49D	HP15A-49D	Hex Screw		3
49E	HP15A-49E	Stopper		2
50	HP15A-50	Center Tails		2
51	HP15A-51	Adjustable Center – Tail Body		1
52	HP15A-52	Adjustable Center – Tail Knob		1
53	HP15A-53	Crank Gear		1
53A	HP15A-53A	Roll Pin		1
54	HP15A-54	Crank Gear Pawl		1
55	HP15A-55	Pawl Stud Screw		1
56	HP15A-56	Crank Gear Shaft		1
57	HP15A-57	Spindle Sleeve		2
58	HP15A-58	Table Holder Pin		1
59	HP15A-59	Square Bar		1
59A	HP15A-59A	Center Tail Assembly Screw		2
60	HP15A-60	Screw Spacer		2
61	HP15A-61	Cable Sliding Spindle		1
61A	HP15A-61A	Hex Nut		2
62	HP15A-62	Table Spindle		2
62A	HP15A-62A	Crank Shaft Sleeve		1
63	HP15A-63	Cable Slide Wheel		1
64	HP15A-64	Cable		1
65	HP15A-65	Wire Rope Clip		1
66	HP15A-66	Top Frame (Rear)		1
67	HP15A-67	Top Frame (Front)		2
68	HP15A-68	Table Frame (Rear)		1
69	HP15A-69	Table Frame (Front)		1
70	HP15A-70	Main Frame (Left/Right Post)		2
71	HP15A-71	Lower Frame Support		2
72	HP15A-72	Frame Bracket		2
72A	HP15A-72A	Frame Base Bracket		2
72B	HP15A-72B	Frame Base Bracket		2
72C	HP15A-72C	Bolt		8
72D	HP15A-72D	Nut		8
73	HP15A-73	Bolt		4
73A	HP15A-73A	Nut		4
74	HP15A-74	Hex Bolt		4
76	HP15A-76	Bed Plate		2
77	HP15A-77	Frame Spindle		2
77A	HP15A-77A	Spindle Sleeve		2
78	HP15A-ID	Identification Label (not shown)		1
80	HP5A-WL	Warning Label (not shown)		1

9.5.1 **HP-35A Head Assembly – Exploded View**

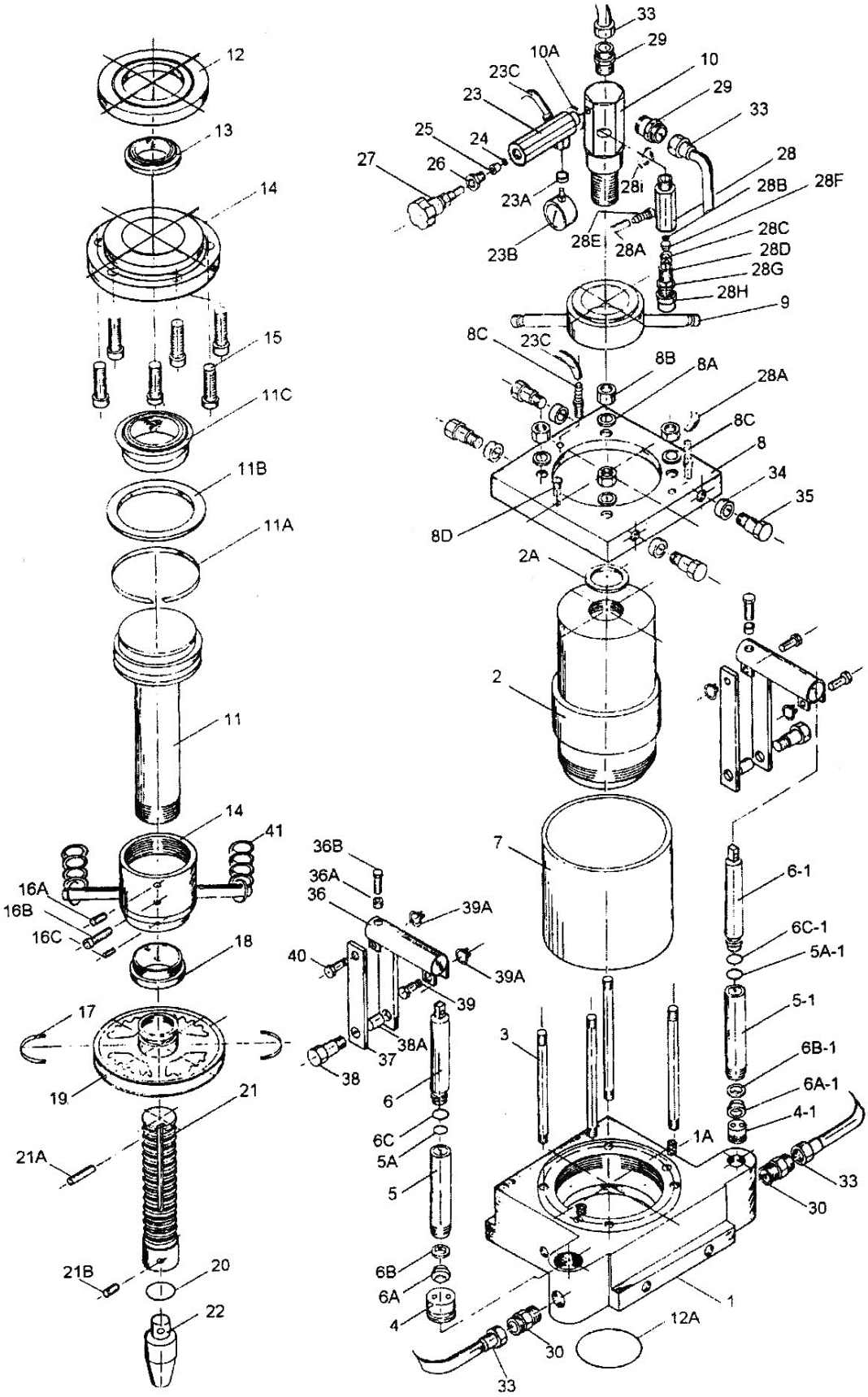

9.5.2 **HP-35A Head Assembly – Parts List**

Index No.	Part No.	Description	Size	Qty
1	HP35A-01	Base		1
1A	HP35A-01A	Base Filter **		2
2	HP35A-02	Cylinder		1
2A	HP35A-02A	Spacer		1
3	HP35A-03	Support Rod		4
4	HP35A-04	Single Action Valve		1
4-1	HP35A-04-1	Single Action Valve		1
5	HP35A-05	Pump Cylinder – Fast		1
5-1	HP35A-05-1	Pump Cylinder – Slow		1
5A	HP35A-05A	O-Ring **		1
5A-1	HP35A-05A-1	O-Ring **		1
6	HP35A-06	Shaft		1
6-1	HP35A-06-1	Shaft		1
6A	HP35A-06A	Cup Seal **		1
6A-1	HP35A-06A-1	Cup Seal **		1
6B	HP35A-06B	Wiper Seal **		1
6B-1	HP35A-06B-1	Wiper Seal **		1
6C	HP35A-06C	O-Ring **		1
6C-1	HP35A-06C-1	O-Ring **		1
7	HP35A-07	Reservoir		1
8	HP35A-08	Hydraulic Base Top		1
8A	TS-0720111	Lock Washer	1/2"	4
8B	TS-0561051	Hex Nut	1/2”-13	4
8C	HP35A-08C	Brass Tube Connector		3
8D	HP35A-08D	Hex Filler Plug w/ Seal		1
9	HP35A-09	Connector Post		1
10	HP35A-10	Oil Pass Connector		1
10A	HP35A-10A	Spacer		1
11	HP35A-11	Plunger		1
11A	HP35A-11A	Support Ring **		1
11B	HP35A-11B	Spacer Ring		1
11C	HP35A-11C	Cup Seal **		1
12	HP35A-12	Gasket		1
12A	HP35A-12A	O-Ring **		1
13	HP35A-13	Seal **		1
14	HP35A-14	Plunger Plate w/Gasket		1
15	TS-0209061	Socket Head Cap Screw	3/8”-16 x 1-1/4”	6
16	HP35A-16	Connector Post		1
16A	HP35A-16A	Socket Set Screw		1
16B	HP35A-16B	Socket Head Cap Screw		1
16C	HP35A-16C	Socket Set Screw		1
17	HP35A-17	Handwheel Retainer Clip		2
18	HP35A-18	Handwheel Spacer		1
19	HP35A-19	Handwheel		1
20	HP35A-20	Seal		1
21	HP35A-21	Extension Screw		1
21A	HP35A-21A	Stopper Roll Pin		1
21B	HP35A-21B	Set Screw		1
22	HP35A-22	Press Head		1
23	HP35A-23	Release Valve Block		1
23A	HP35A-23A	Spacer		1
23B	HP35A-23B	Pressure Gauge		1
23C	HP35A-23C	Plastic Tube		1
24	HP35A-24	Steel Ball		1
25	HP35A-25	Release Valve Seal **		1
26	HP35A-26	Release Valve Nut		1
27	HP35A-27	Release Valve		1
28	HP35A-28	Safety Valve Block		1
28A	HP35A-28A	Plastic Tube		1

Index No.	Part No.	Description	Size	Qty
28B	HP35A-28B	Steel Ball		1
28C	HP35A-28C	Safety Spring		1
28D	HP35A-28D	Safety Valve Set Screw		1
28E	HP35A-28E	Brass Tube Connector		1
28F	HP35A-28F	Release Valve Seal **		1
28G	HP35A-28G	Washer		1
28H	HP35A-28H	Hex Nut		1
28I	HP35A-28I	Spacer		1
29	HP35A-29	Male Connector		2
30	HP35A-30	Male Connector		2
33	HP35A-33	Bronze Tube		2
34	HP35A-34	Sliding Wheel		4
35	HP35A-35	Hex Locking Bolt		4
36	HP35A-36	Handle Socket		2
36A	TS-0561031	Hex Nut	3/8”-16	2
36B	TS-0060051	Hex Cap Screw	3/8”-16 x 1”	2
37	HP35A-37	Linking Sleeve		4
38	HP35A-38	Bottom Fixed Bolt		2
38A	HP35A-38A	Spacer		2
39	HP35A-39	Bolt		2
39A	HP35A-39A	C-Clip		4
40	HP35A-40	Bolt		2
41	HP35A-41	Return Spring		2
	HP35A-RK	Hydraulic Repair Kit (includes items marked with **)		

9.6.1 **HP-35A Frame Assembly – Exploded View**

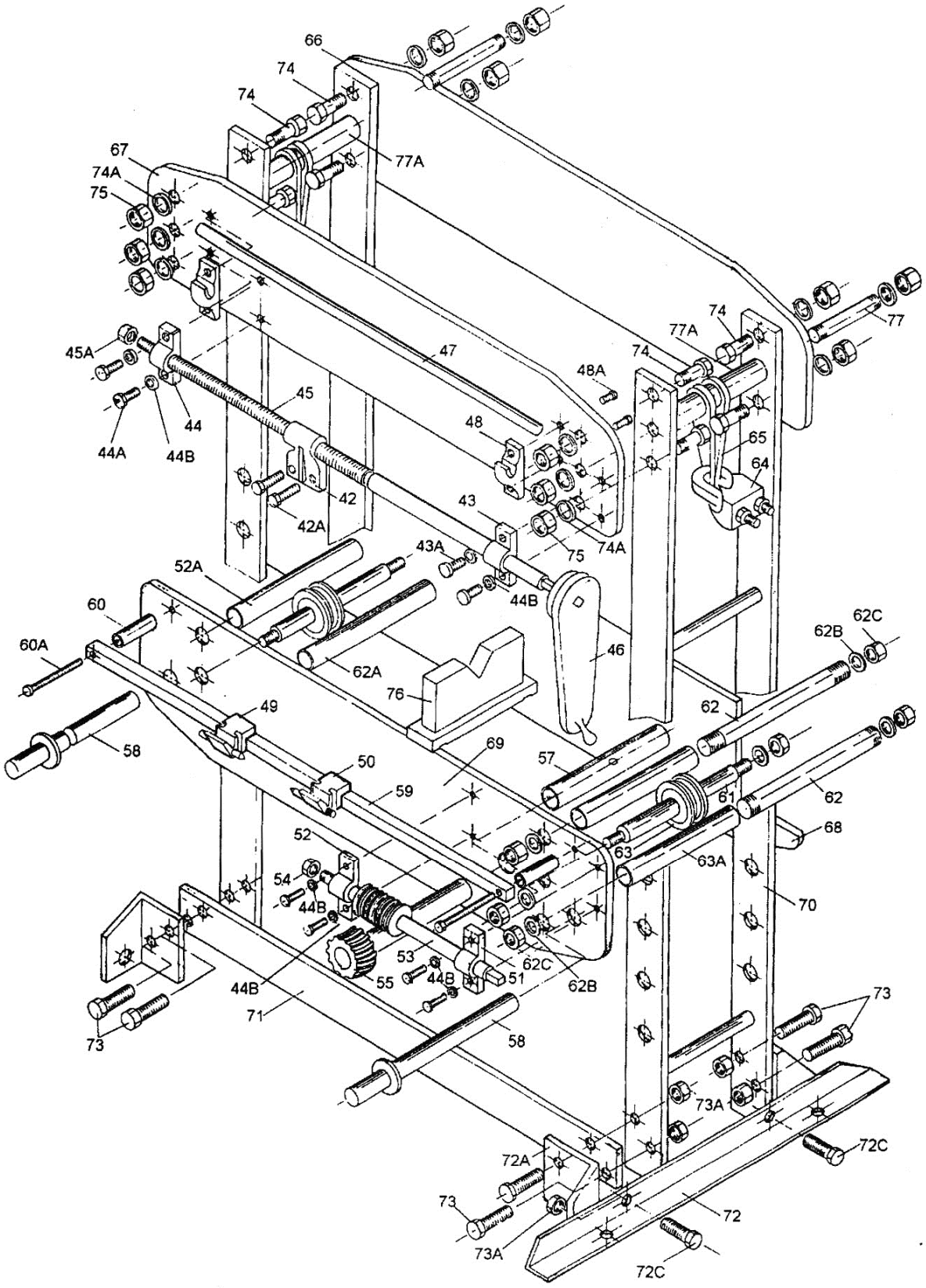

9.6.2 **HP-35A Frame Assembly – Parts List**

Index No.	Part No.	Description	Size	Qty
42	HP35A-42	Shaft Holder		1
42A	HP35A-42A	Hex Cap Head Bolt		2
43	HP35A-43	Rolling Shaft Block		1
43A	TS-0060061	Hex Cap Screw	3/8”-16 x 1-1/4”	2
44	HP35A-44	Rolling Shaft Block		1
44A	TS-0060051	Hex Cap Screw	3/8”-16 x 1”	2
44B	TS-0680041	Flat Washer	3/8”	8
45	HP35A-45	Sliding Shaft		1
45A	TS-0561072	Hex Nut	5/8”-18	1
46	HP35A-46	Hand Crank		1
47	HP35A-47	Handle		1
48	HP35A-48	Handle Holder		2
48A	TS-0051051	Hex Cap Screw	5/16”-18 x 1”	4
49	HP35A-49	Center Post Assembly (left)		1
50	HP35A-50	Center Post Assembly (right)		1
51	HP35A-51	Fixed Holder		1
52	HP35A-52	Shaft Fixed Block		1
53	HP35A-53	Drive Gear Shaft Assembly		1
54	HP35A-54	Hex Nut		1
55	HP35A-55	Worm Gear w/ Shaft		1
56	TS-0060051	Hex Cap Screw	3/8”-16 x 1”	4
57	HP35A-57	Spacer Sleeve		1
58	HP35A-58	Table Holder Pin		1
59	HP35A-59	Square Bar		1
60	HP35A-60	Screw Spacer		2
60A	TS-0060151	Hex Cap Screw	3/8” x 3-1/2”	2
61	HP35A-61	Slide Wheel Shaft		2
62	HP35A-62	Table Bolt		4
62A	HP35A-62A	Spindle Sleeve		8
62B	TS-0720131	Lock Washer	5/8”	12
62C	TS-0561071	Hex Nut	5/8”-11	12
63	HP35A-63	Cable Slide Wheel		2
64	HP35A-64	Wire Rope Clip		2
65	HP35A-65	Cable		1
66	HP35A-66	Top Frame (Rear)		1
67	HP35A-67	Top Frame (Front)		1
68	HP35A-68	Table Frame (Rear)		1
69	HP35A-69	Table Frame (Front)		1
70	HP35A-70	Main Frame		2
71	HP35A-71	Lower Frame Support		2
72	HP35A-72	Base Frame Bracket		2
72A	HP35A-72A	Frame Bracket (Left)		2
72B	HP35A-72B	Frame Bracket (Right)		2
72C	TS-0071011	Hex Cap Screw	5/8”-11 x 1-1/2”	4
73	TS-0071031	Hex Cap Screw	5/8”-11 x 2”	8
73A	TS-0561071	Hex Nut	5/8”-11	12
74	HP35A-74	Hex Head Bolt	3/4” x 2”	8
74A	TS-0720141	Lock Washer	3/4”	12
75	TS-0561081	Hex Nut	3/4"-10	12
76	HP35A-76	V-Block Bed Plate		2
77	HP35A-77	Top Link Bolt		2
77A	HP35A-77A	Spacer Sleeve		2
78	HP35A-ID	Identification Label (not shown)		1
80	HP5A-WL	Warning Label (not shown)		1

This page intentionally left blank.

This page intentionally left blank

427 New Sanford Road
LaVergne, Tennessee 37086
Phone: 800-274-6848
www.jettools.com