HEIN-WERNER AUTOMOTIVE®

Service Jacks

Operating Instructions & Parts Manual

Model Number	Capacity
HW93657	4 Ton
HW93667 (Air/Manual)	4 Ton
HW93660	10 Ton
HW93662 (Air/Manual)	10 Ton

Made in the U.S.A.

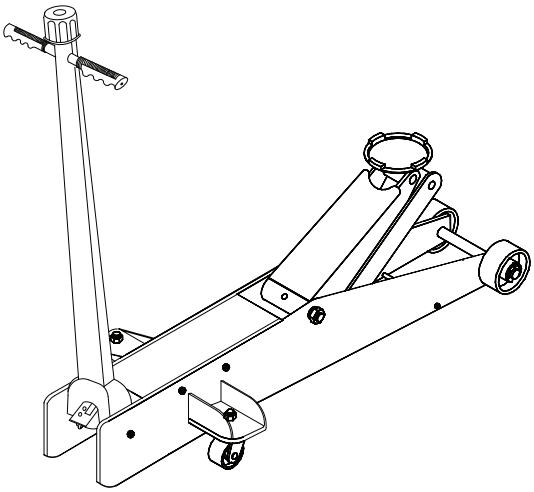

Model No. HW93657 & HW93660

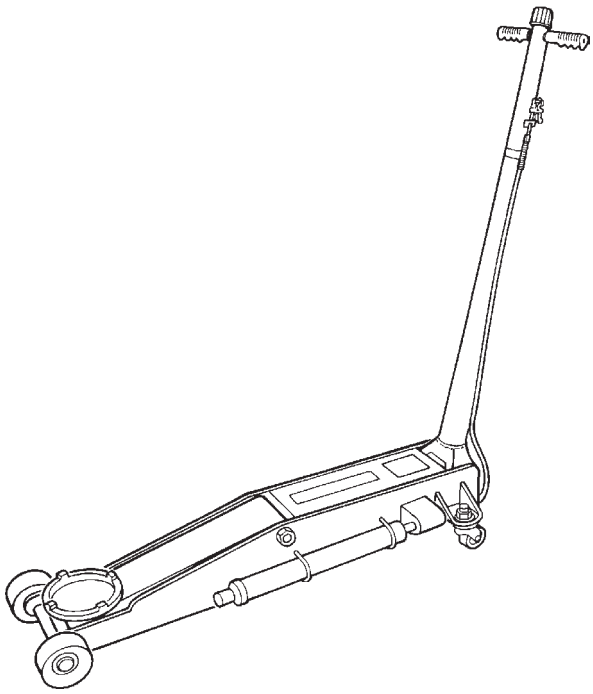

Model No. HW93667 & HW93662

This is the safety alert symbol. It is used to alert you to potential personal injury hazards. Obey all safety messages that follow this symbol to avoid possible injury or death.

SFA Companies
10939 N. Pomona Ave. Kansas City, MO 64153
customerservices@heinwerner-automotive.com

Read this manual and follow all the Safety Rules and Operating Instructions before using this product.

HW93657-M0 rev A

SAFETY and GENERAL INFORMATION

Save these instructions. For your safety *read, understand, and follow* the information provided with and on this jack. The owner and operator of this equipment shall have an understanding of this jack and safe operating procedures before attempting to use. The owner and operator shall be aware that use and repair of this product may require special skills and knowledge. Instructions and safety information shall be conveyed in the operator's native language before use of this jack is authorized. If any doubt exists as to the safe and proper use of this jack, remove from service immediately.

Inspect before each use. Do not use if broken, bent, cracked, or damaged parts (including labels) are noted. Any jack that appears damaged in any way, operates abnormally or is missing parts, shall be removed from service immediately and the manufacturer notified. If you suspect that the jack was subjected to a shock load (a load dropped suddenly, unexpectedly upon it), immediately discontinue use until the jack has been checked by a factory authorized service center (contact distributor or manufacturer for list of Authorized Service Centers). It is recommended that an annual inspection be done by qualified personnel. Replace worn or damaged parts with Hein-Werner Authorized Replacement Parts only. Labels and owner's manuals are available from manufacturer.

PRODUCT DESCRIPTION

Hein-Werner Hydraulic Service Jacks are designed to lift, not support, rated capacity loads consisting of one end of a vehicle. Immediately after lifting, the load must be supported by a pair of appropriately rated jack stands.

***NEVER** use a hydraulic jack as a stand-alone device. After lifting, **immediately** support the lifted vehicle with a pair of appropriately rated jack stands. **NEVER** place **any** portion of your body beneath the vehicle when lifting **OR** lowering!*

SPECIFICATIONS

Model	Capacity	Min. Height	Max. Height	Chassis Length	Wheel to Wheel Width	Min. Air Pressure for Rated Load	Gross Weight
HW93657	4 Ton	5"	25-3/4"	49"	15"	N/A	219 lb.
HW93667						140 psi	233 lb.
HW93660	10 Ton	6-3/4"	25-1/2"	53-1/2"	20 1/2"	N/A	420 lb.
HW93662						140 psi	435 lb.

WARNING

- **Study, understand, and follow** all printed materials provided with/on this product before use.
- **Do not** exceed rated capacity.
- **This is a lifting device only!**
- **Immediately** after lifting, support the load with **a pair** of appropriately rated jack stands.
- Use only on hard, level surfaces capable of supporting rated capacity loads.
- On air actuated unit, never wire, clamp or otherwise disable the lift control valve to function by other than operator's hand.
- Do not use adapters or accessories that are not provided initially.
- Lift only on areas of the vehicle as specified by the vehicle manufacturer.
- Do not move or dolly loads with this device.
- No alterations shall be made to this product.
- **Failure to heed** these **markings** may result in **personal injury and/or property damage**.

WARNING

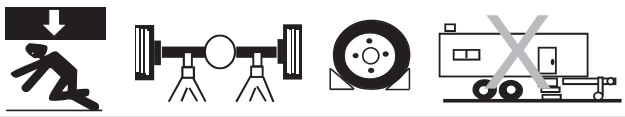

To avoid **crushing and related injuries**:

- **Never** work on, under or around a load supported only by hydraulic jack.
- **Always** use adequately rated jack stands.
- Chock each unlifted tire in both directions.
- **Do not** use this device to lift, level, lower, support nor move a house, mobile home, travel trailer, camper or any building structure.
- **Be alert** and **sober** when using this product. Do not operate under the influence of drugs or alcohol.

ADVERTENCIA

- Leer, comprender, y seguir las instrucciónes antes de utilizar el aparato.
- El manual de instrucciónes y la información de seguridad deben estar comunicado en lengua del operador antes del uso.
- No seguir estas indicaciónes puede causar daños personales o materiales.

ASSEMBLY

Equipment needed

1. Needle nose locking pliers
2. Snap-ring pliers (Model HW93657 & HW93667 only)
3. 15 /16" wrench (Model HW93660 & HW93662 only)
4. Hammer
5. All necessary hardware is assembled loosely onto the jack.

Instructions

1. For HW93657 and HW93667: (see figure 1) Remove the retaining rings and the handle pin from the jack base that connects through the handle fork.
   For HW93660 and HW93662: (see figure 2) Remove the 5/8"-18 bolts and the handle pin from the jack base that connects through the handle fork.
2. Remove the #6-32 screw and nut from the universal receptacle.
3. Pull the universal assembly out a minimum of 1-3/4".
4. Clamp the needle nose locking pliers onto the rod so that the universal assembly will not retract back into the handle.
5. Slide the universal assembly into the handle socket so that it extends out the other side.
6. Push the pivot pin that was removed in step 1 back through the handle and handle socket (may have to gently tap the pin with a hammer).
7. For HW93660 & HW93662, align the pivot pin with the holes on the side plates that the pivot pin was removed from and tighten the 5/8"-18 bolts into the pivot pin until secure.
8. Connect the universal assembly to the universal receptacle rod using the #6-32 screw and nut (finger tighten only).
9. Remove the needle nose locking pliers.
10. Replace plug on hydraulic unit with vent screw from owners manual bag.
11. Jack is now operational and ready for use.

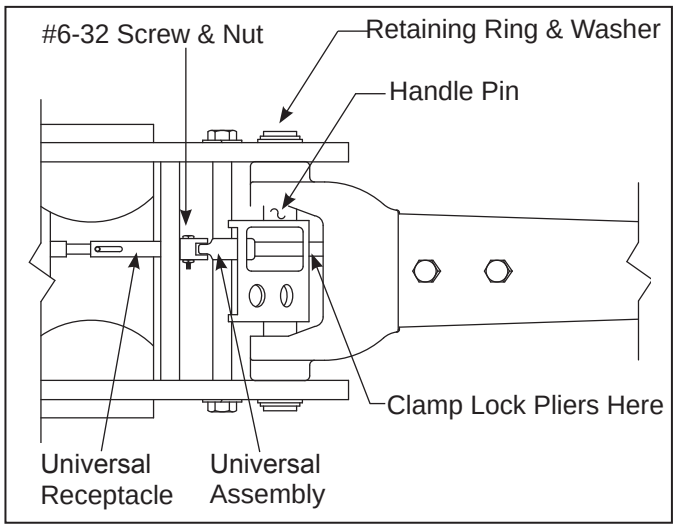

Figure 1- Assembly Illustration for HW93657 & HW93667

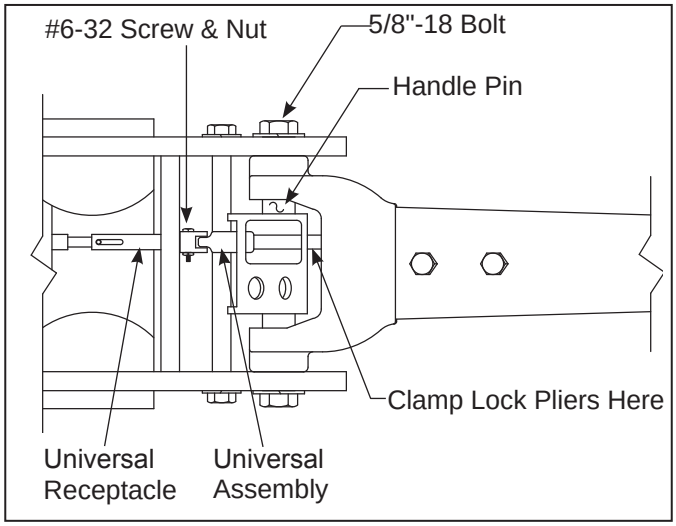

Figure 2- Assembly Illustration for HW93660 & HW93662

PREPARATION (REFER TO FIGURES 3 & 4)

Before Use

1. Verify that the product and application are compatible, if in doubt call Hein-Werner technical service.
2. Before use, read the operator's manual completely and familiarize yourself thoroughly with the product, its components and recognize the potential hazards associated with its use.
3. To familiarize yourself with the basic operation of these jacks, locate and turn the release valve knob:
   a. Clockwise until firm resistance is felt to further turning. This is the '**CLOSED**' release valve position used to **raise** the load.
   b. Counter-clockwise, but no more than 1/2 full turn from the closed position. This is the '**OPEN**' release valve position used to lower the load. The more you turn the release valve knob Counter-clockwise, the **faster** the load descends.
4. With saddle fully lowered, locate and remove cover plate, then remove air vent screw. Pump the operating handle through 6 to 8 full strokes. Check the oil level. Ensure the oil level is within ~3/16" from the inner cylinder as viewed from the air vent screw hole.
5. Reinstall the air vent screw.
6. Check to ensure that the jack rolls freely. Raise and lower the unloaded saddle throughout the lift range before putting into service to ensure the pump and release valve operate smoothly.
7. Replace worn or damaged parts and assemblies with Hein-Werner Replacement Parts only. Lubricate as instructed in Maintenance Section.

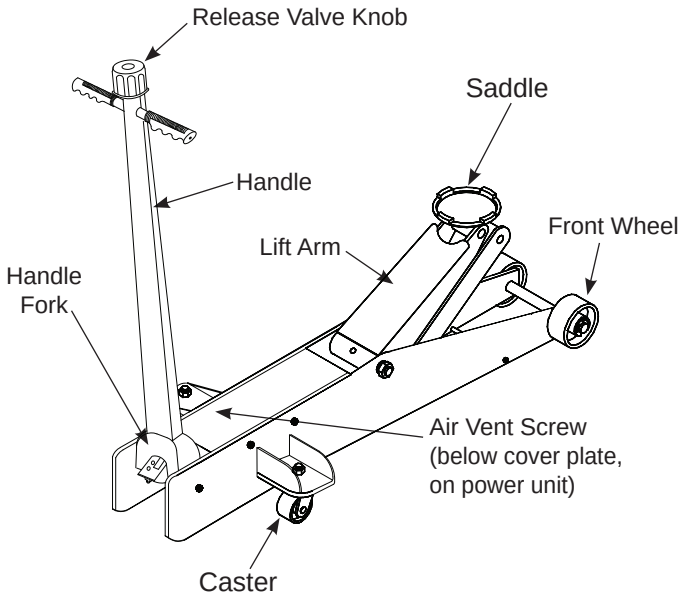

Figure 3 - Model HW93657 & HW93660 Nomenclature

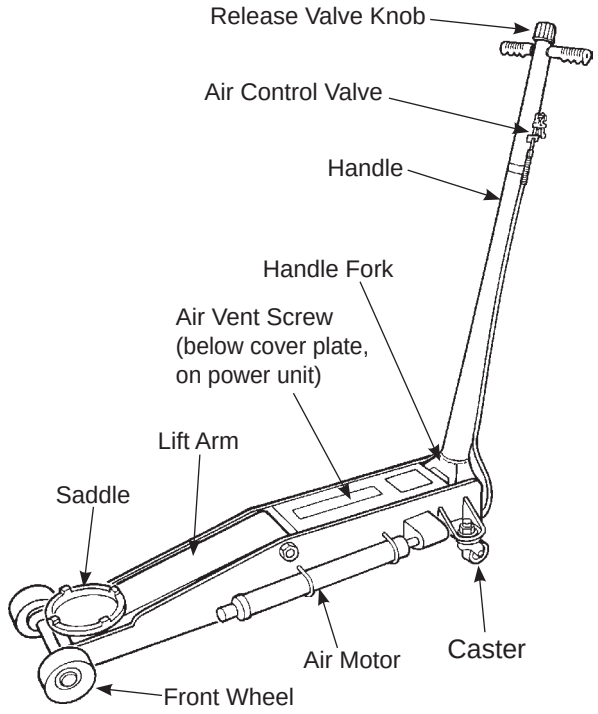

Figure 4 - Model HW93667 & HW93662 Nomenclature

OPERATION

Lifting

Only attachments and/or adapters supplied by the manufacturer shall be used. Lift only on areas of the vehicle as specified by the vehicle manufacturer.

1. Follow the vehicle manufacturer's recommended guidelines for lifting. Engage the emergency brake and chock each unlifted wheel in both directions to prevent inadvertent vehicle movement.
2. Locate and close the release valve by turning the release valve knob clockwise until firm resistance is felt.
3. Refer to the vehicle manufacturer owner's manual to locate approved lifting points on the vehicle. Center jack saddle under lift point.
4. Verify lift point then use handle pump to contact lift point. To lift, pump handle or squeeze air control valve (model HW93667 & HW93662) until load reaches desired height.
5. Transfer the load **immediately** to appropriately rated jack stands.

***NEVER** use hydraulic jack as a stand alone device! **ALWAYS** transfer the lifted load **IMMEDIATELY** to a pair of appropriately rated jack stands. Use one pair of jack stands per vehicle. Rated capacity is per pair only! Do not exceed rated capacity.*

Overloading may cause hydraulic system failure.

Lowering

*Be sure all tools and personnel are clear before lowering load. **Slowly open the release valve!** The more you turn the release valve knob counter-clockwise, the faster the load will come down. **Maintain control** of the rate of speed at which the load lowers at all times!*

1. Raise load high enough to clear the jack stands.
2. Remove jack stands, carefully (**always** used in pairs).
3. **Slowly** turn the release valve knob counter-clockwise, but no more than 1/2 full turn. <u>If the load fails to lower</u>:
   a. Use another jack to raise the vehicle high enough to reinstall jack stands.
   b. Remove the malfunctioning jack and then the jack stands.
   c. Using the functioning jack, lower the load by turning the release valve knob counter-clockwise, but no more than 1/2 full turn.
4. After removing jack from under the load, push saddle down to reduce ram exposure to rust and contamination.

MAINTENANCE

Important: Use only a good grade hydraulic jack oil. Avoid mixing different types of fluid and **Never** use brake fluid, turbine oil, transmission fluid, motor oil or glycerin. Improper fluid can cause failure of the jack and the potential for sudden and immediate loss of load. We recommend Hein-Werner hydraulic jack oil HW 93291 or equivalent.

Adding oil

1. Lower saddle fully.
2. Set jack in its upright, level position.
3. Locate and remove air vent screw.
4. Fill with oil until ~3/16" above the inner cylinder as seen from the air vent screw hole.
5. Reinstall the air vent screw.

Changing oil

For best performance and longest life, replace the complete hydraulic fluid at least once a year.

1. Lower saddle fully.
2. Remove the air vent screw.
3. Lay the jack on its side and drain the fluid into a suitable container.

Note: Dispose of hydraulic fluid in accordance with local regulations.

4. Fill with oil until ~3/16" above the inner cylinder as seen from the air vent screw hole.
5. Reinstall the air vent screw.

Lubrication

A periodic coating of light lubricating oil to pivot points, axles and hinges will help to prevent rust and assure that wheels, castors and pump assemblies move freely.

Cleaning

Periodically check the pump piston and ram for signs of rust or corrosion. Clean as needed and wipe with an oily cloth.

Note: Never use sandpaper or abrasive material on these surfaces!

Storage

Lower the saddle to its lowest position when not in use.

TROUBLESHOOTING

Symptom	Possible Causes	Corrective Action
Jack will not lift load	• Release knob not tightly closed • Overload condition	• Ensure release knob tightly closed • Remedy overload condition
Jack bleeds off after lift	• Hydraulic unit malfunction	• Discontinue use, contact Hein-Werner Technical Service
Jack will not lower after unloading	• Reservoir overfilled • Linkages binding • Fluid level low	• Drain fluid to proper level • Clean and lubricate moving parts • Ensure proper fluid level
Will not lift to full extension	• Fluid level low	• Ensure proper fluid level

REPLACEMENT PARTS (refer to page 6 thru 19)

Not all components of the jack are replacement items, but are illustrated as a convenient reference of location and position in the assembly sequence. When ordering parts, give model number, part number and parts description. Call or write for current pricing: Hein-Werner Customer Support, 10939 N. Pomona Ave. Kansas City, MO 64153. Phone: (816)891-6390; E-mail: customerservices@heinwerner-automotive.com

Model HW93657 Replacement Parts Illustration Part I (refer to parts list on page 8)

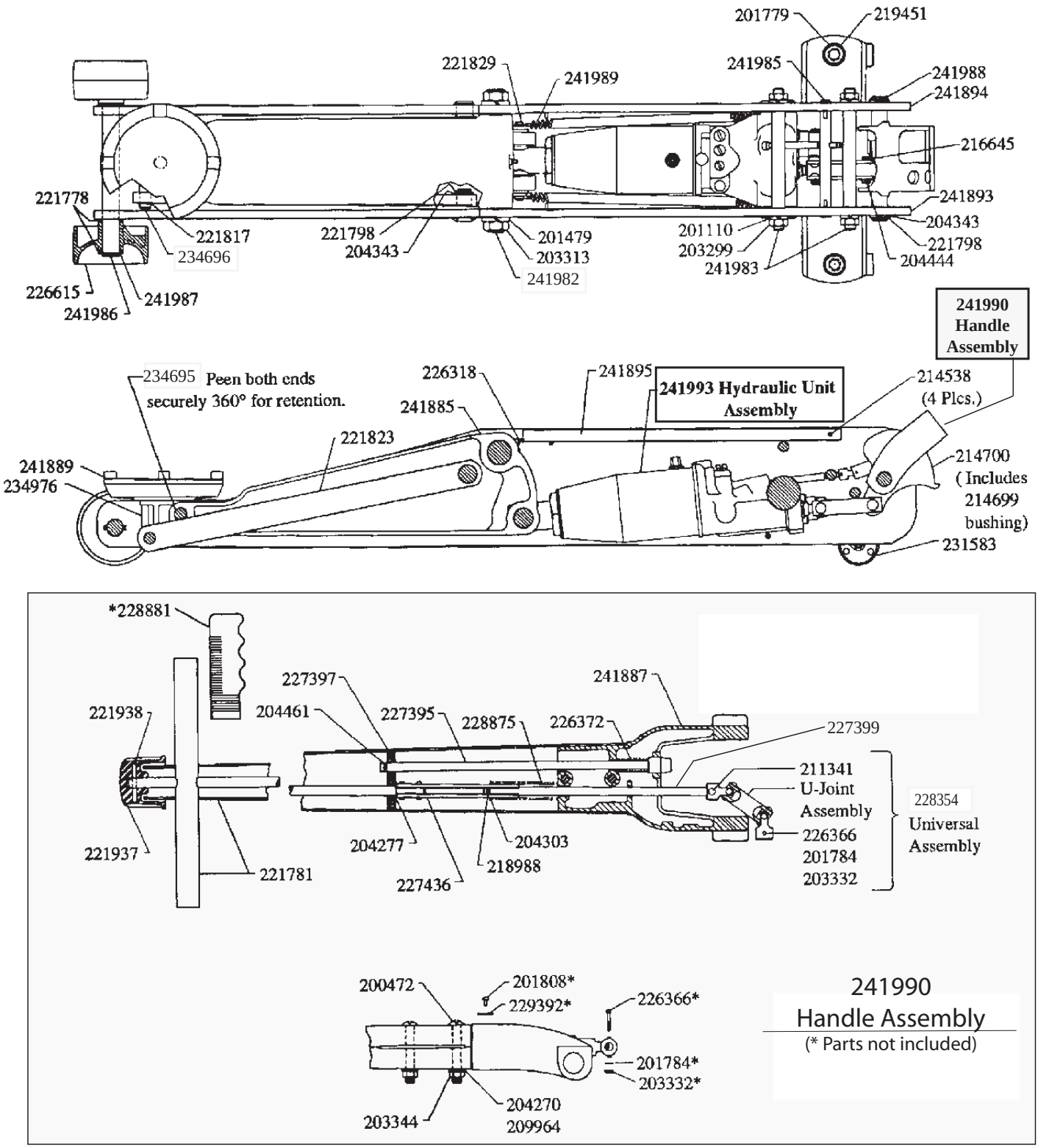

Figure 5 - Parts Illustration for Model HW93657

Model HW93657 Replacement Parts Illustration Part II - Hydraulic Unit (refer to parts list on page 8)

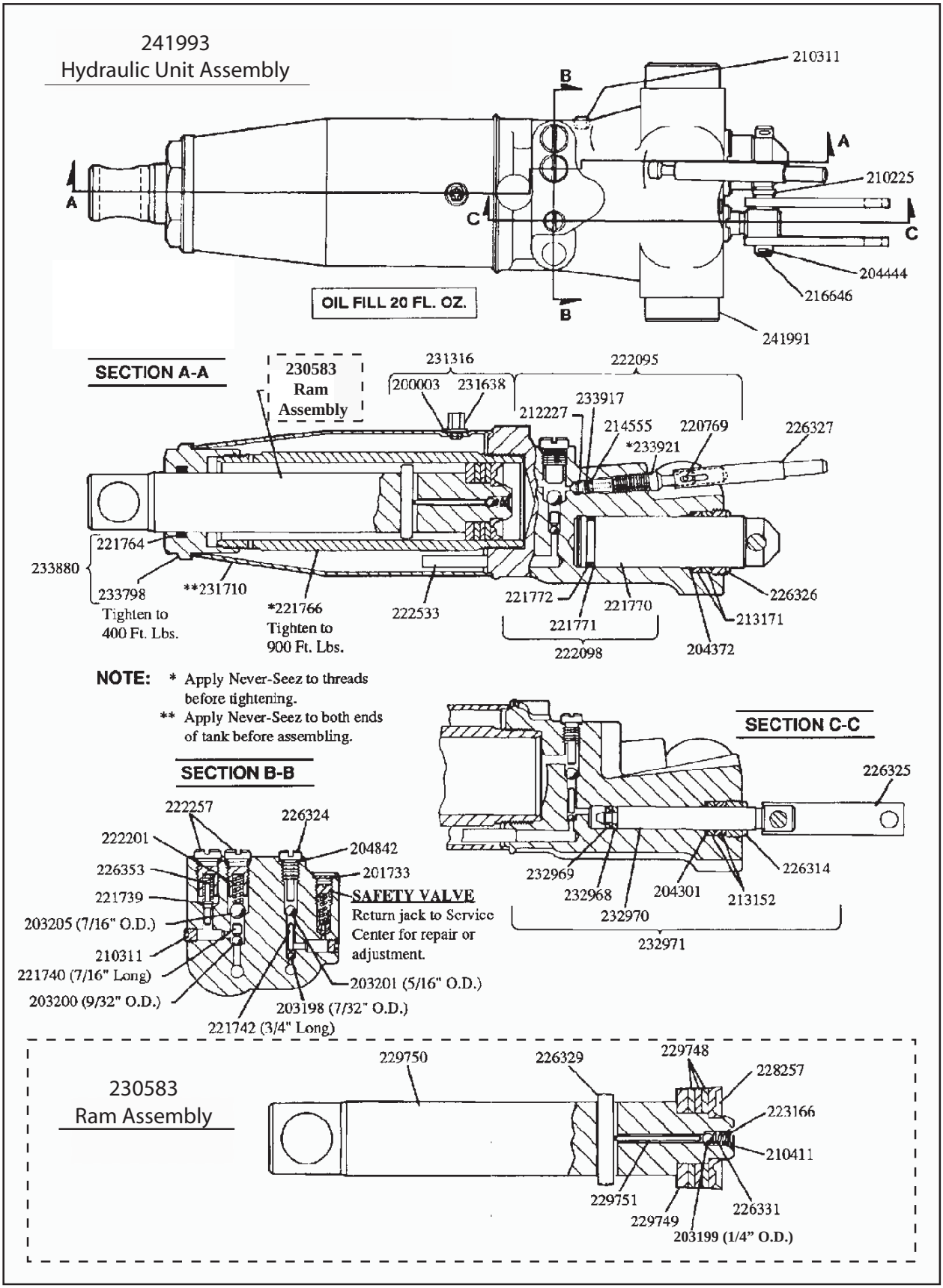

Figure 6 - Parts Illustration for Model HW93657 (Hydraulic Unit)

Model HW93657 Replacement Parts List (refer to figures on page 6 & 7)

Part#	Description	Qty.
200003*	Gasket	1
200472	Screw	2
201110	Lockwasher	4
201479	Lockwasher	2
201733	Plug	1
201779	Lockwasher	2
201784	Lockwasher	1
N/A	Rivet	2
203198*	Ball (7/32" O.D.)	1
203199*	Ball (1/4" O.D.)	1
203200*	Ball (9/32" O.D.)	1
203201*	Ball (5/16" O.D.)	1
203205*	Ball (7/16" O.D.)	1
203299	Jam Nut	4
203313	Jam Nut	2
203332	Nut	1
203344	Jam Nut	2
204270	Washer	2
204277	Washer	1
204301	Washer	1
204303	Washer	1
204343	Washer	4
204372	Washer	1
204444	Cotter Pin	3
204461	Cotter Pin	1
204842*	Copper Gasket	1
209964	Lockwasher	2
210225	Spacer	1
210311	Pipe Plug	3
210411*	Washer	1
211341	Rivet	1
212227	Release Valve	1
213152*	Packing Ring	2
213171*	Packing Ring	2
214538	Groove Pin	4
214555*	O-ring	1
214699	Bushing	1
214700	Handle Segment Assy.	1
216645	Pin	1
216646	Pump Pin	1
218988	Roll Pin	1
219451	Hex Nut	2
220769	Cross Pin	1
221739*	Poppet	1
221740	Ball Stop Plug(7/16" L)	1

Part#	Description	Qty.
221742	Ball Stop Plug (3/4" L)	1
221764*	Ram Quad Ring	1
221766	Cylinder	1
221770	Low Pressure Pump	1
221771*	Washer	1
221772*	Quad ring	1
221778	Washer	4
221781	Handle and Cross Bar	1
221798	Retainer Ring	4
221817	Retainer Ring	2
N/A	Parallel Link	2
221829	Pin	1
221937	Turning Knob	1
221938	Roll Pin	1
222095	Release Stem Kit	1
222098	Speed Pump Assy.	1
222201*	Spring	1
222257	Plug Poppet Valve	2
222533*	Screen	2
223166*	Ram Screen	1
226314	Gland Nut	1
226318	Grease Fitting	1
226324	Pressure Plug	1
226325	Pump Link	2
226326	Nut	1
226327	Slotted Tube	1
226329	Pin	1
226331*	Spring	1
226353*	Spring	1
226366	Hex Head Bolt	1
226372	Spring	1
226615	Front Wheel	2
227395	Plunger Assy.	1
227397	Release Link	1
227399	Extension Rod	1
227436	Turning Rod Assy.	1
228257*	U-cup	1
228354	Universal Assy.	1
228875	Spring	1
228881	Grip	2
N/A	Serial Plate	1
229748*	Heel Plate	3
229749	Washer	1
229750	Ram	1
229751	Pin	1

Part#	Description	Qty.
230583	Ram Assy.	1
231316	Vent Valve Assy.	1
231583	Rear Caster	2
231638	Filler Screw	1
231710	Oil Tank	1
232968*	Back-up Washer	1
232969*	U-cup	1
232970	Pressure Pump	1
232971	Pressure Pump Kit	1
233798	Tank Nut	1
N/A	Tank Nut and Quad Ring	1
233917*	Plastic Spring	1
233921	Release Stem	1
234695	Bellcrank Pin 3/4x3.38	1
234696	Parallel Link Pin	1
234976	Cap Housing	1
N/A	Bellcrank	1
241887	Handle Socket	1
241889	Lift cap	1
N/A	Sideplate Assy	1
N/A	Sideplate Assy	1
241895	Hydraulic Unit Cover	1
241907	Repair Kit (Hyd. Unit)	-
241982	Fulcrum Pin	1
241983	Sideplate Tie Rod	2
241985	Support Rod	1
241986	Front Axle	1
241987	Retainer Ring	2
241988	Handle Pivot Pin	1
241989	Extension Spring	2
241990	Handle Assy.	1
N/A	Hydraulic Unit Casting	1
241993	Hydraulic Unit Assy.	1

HW93657-K0 Label Kit (not shown)
HW93657-M0 Manual

(*) Items included in Repair Kit 241907

Model HW93660 Replacement Parts Illustration Part I (refer to parts list on page 11)

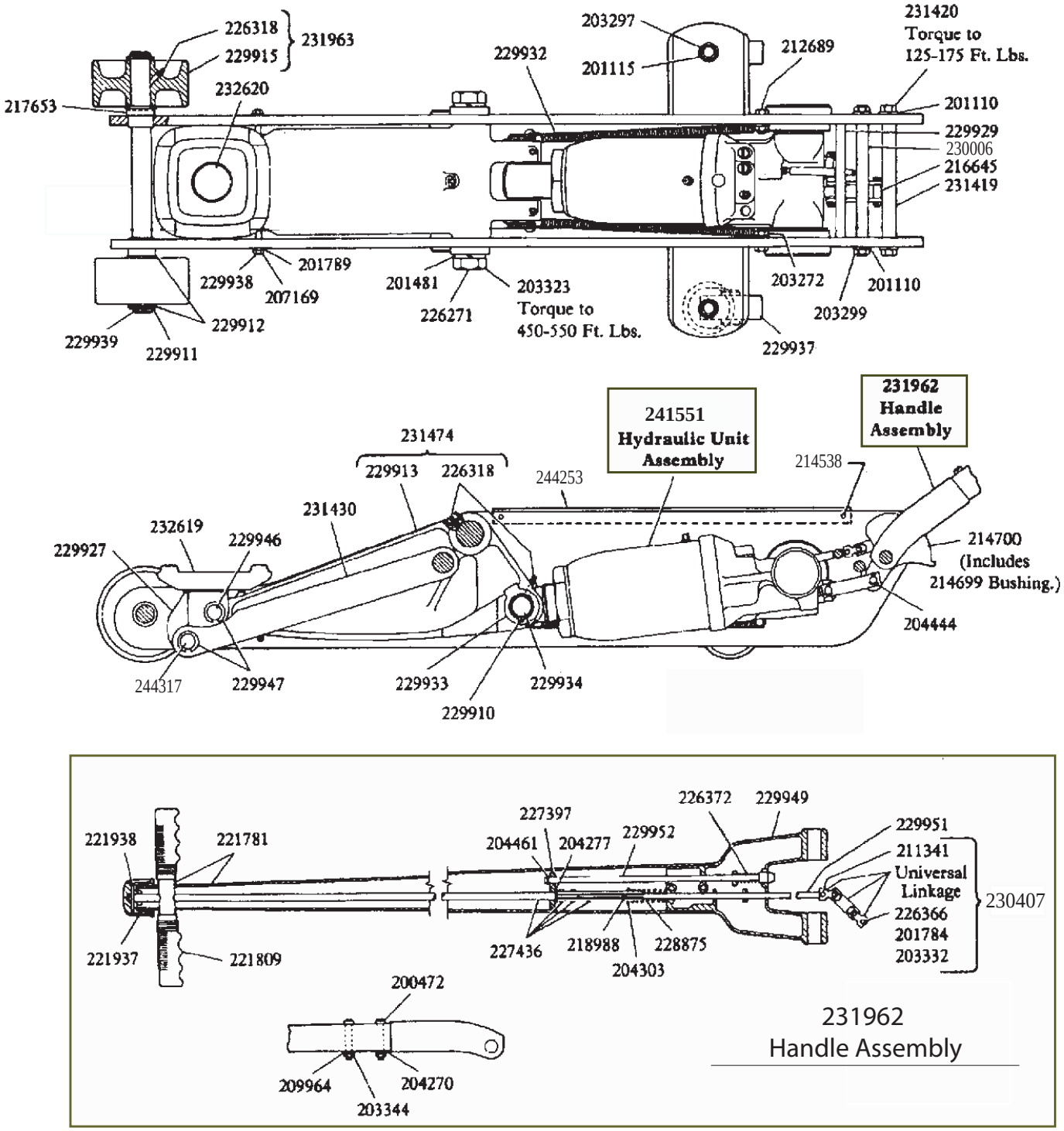

Figure 7 - Parts Illustration for Model HW93660

Model HW93660 Replacement Parts Illustration Part II - Hydraulic Unit (refer to parts list on page 11)

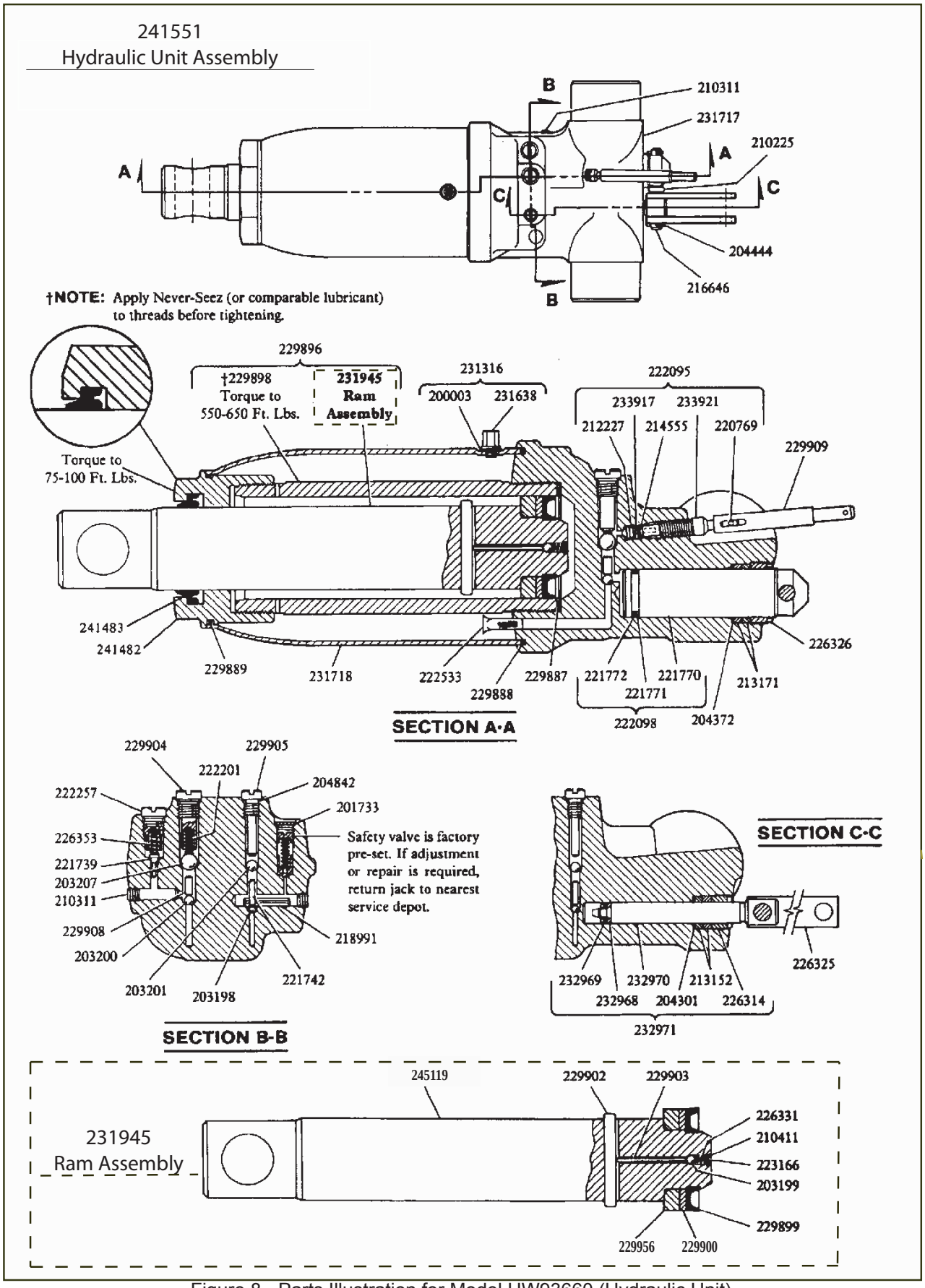

Figure 8 - Parts Illustration for Model HW93660 (Hydraulic Unit)

Model HW93660 Replacement Parts List (refer to figures on page 9 & 10)

Part#	Description	Qty.	Part#	Description	Qty..	Part#	Description	Qty.
200003	Gasket	1	220769	Cross Pin	1	229927	Cap Housing	1
200472	Bolt	2	221739	Poppet	1	229929	Bearing	1
201110	Lockwasher	4	221742	Ball Stop Plug	1	229932	Spring	2
201115	Lockwasher	2	221770	Speed Pump	1	229933	Plate	2
201481	Lockwasher	2	221771*	Back-up Washer	1	229934	Pin	1
201733	Expansion Plug	1	221772	Quad Ring	1	229937	Caster	2
201784	Lockwasher	1	221781	Handle & Cross Bar	1	229938	Pin	1
201789	Lockwasher	2	221809	Handle Grip	2	229939	Front Axle	1
203198*	Ball	1	221937	Release Knob	1	229946	Pin	1
203199*	Ball	1	221938	Roll Pin	1	229947	Retaining Ring	4
203200*	Ball	1	222095	Release Stem Assy.	1	N/A	Handle Socket	1
203201*	Ball	1	222098	Speed Pump Assy.	1	229951	Extension Rod	1
203207*	Ball	1	222201*	Spring	1	229952	Plunger Assy.	1
203272	Nut	2	222257	Plug	1	229956	Heel Plate	1
203297	Nut	2	222533*	Screen	2	230006	Bumper Pin	1
203299	Nut	2	223166*	Screen	1	230407	Universal Assy.	1
203323	Nut	2	224253	Cover	1	231316	Filler Plug & Gasket Assy.	1
203332	Nut	1	N/A	Fulcrum Pin	1	231419	Fulcrum Pin	1
203344	Nut	2	226314	Gland Nut	1	231420	Bolt	2
204270	Washer	2	226318	Grease Fitting	5	N/A	Parallel Link	2
204277	Washer	1	226325	Pump Link	2	N/A	Bell Crank & Fittings	1
204301	Washer	1	226326	Gland Nut	1	231638	Filler Plug & Vent Valve	1
204303	Washer	1	226331	Spring	1	231717	Base	1
204372	Washer	1	226353*	Spring	1	231718	Oil Tank	1
204444	Cotter Pin	4	226366	Bolt	1	231945	Ram Assy.	1
204461	Cotter Pin	1	226372	Plunger Spring	1	231962	Handle Assy.	1
204842*	Gasket	1	227397	Link	1	231963	Front Wheel Assy.	2
207169	Nut	2	227436	Turning Rod Assy.	1	232619	Lifting Cap	1
209964	Lockwasher	2	228875	Spring	1	232620	Swivel Pin	1
210225	Spacer	1	229887*	O-ring	1	232968*	Back-up Washer	1
210311	Pipe Plug	3	229888*	O-ring	1	232969*	U-cup Packing	1
210411*	Washer	1	229889*	O-ring	1	232970	Pressure Pump	1
211341	Rivet	1	N/A	Ram & Cylinder Assy.	1	232971	Pressure Pump & Gland Packing Assy.	1
212227	Release Valve	1	229898	Cylinder	1			
212689	Bolt	2	229899*	U-cup Packing	1	233917	Plastic Spring	1
213152*	Packing Ring	2	229900*	Back-up Washer	1	233921	Release Stem	1
213171*	Packing Ring	2	229902	Cross Pin	1	240616	Repair Kit (Hyd. Unit)	-
214538	Groove Pin	4	229903	Pin	1	241482	Tank Nut	1
214555*	O-ring	1	229904	Plug	1	241483*	Seal	1
214699	Bushing	1	229905	Plug	1	241551	Hydraulic Unit Assy.	1
214700	Handle Segment & Bushing	1	229908	Spacer	1	244317	Pin	1
			229909	Slotted Tube	1	245119	Ram	1
216645	Pin	1	229910	Retaining Ring	2			
216646	Pin	1	229911	Retaining Ring	2	HW93660-K0 Label Kit (not shown)		
217653	Roll Pin	2	229912	Washer	4	HW93657-M0 Manual		
218988	Roll Pin	1	N/A	Bell Crank	1			
218991	Roll Pin	1	231963	Front Wheel	2	(*) Items included in Repair Kit 240616		

Model HW93662 Replacement Parts Illustration Part I (refer to parts list on page 14)

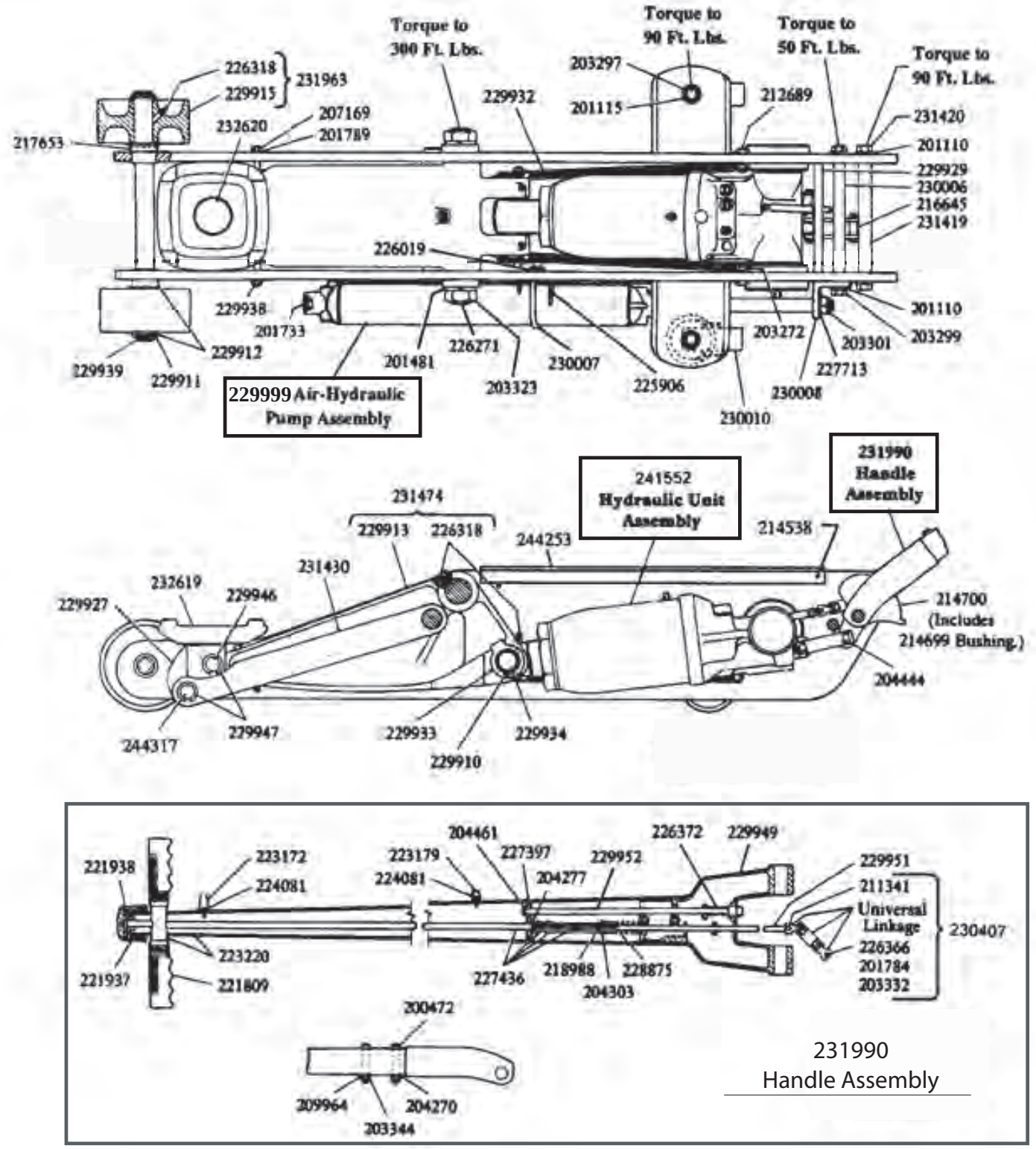

Figure 9 - Parts Illustration for Model HW93662

Model HW93662 Replacement Parts Illustration Part II - Hyd. Unit (refer to parts list on page 14)

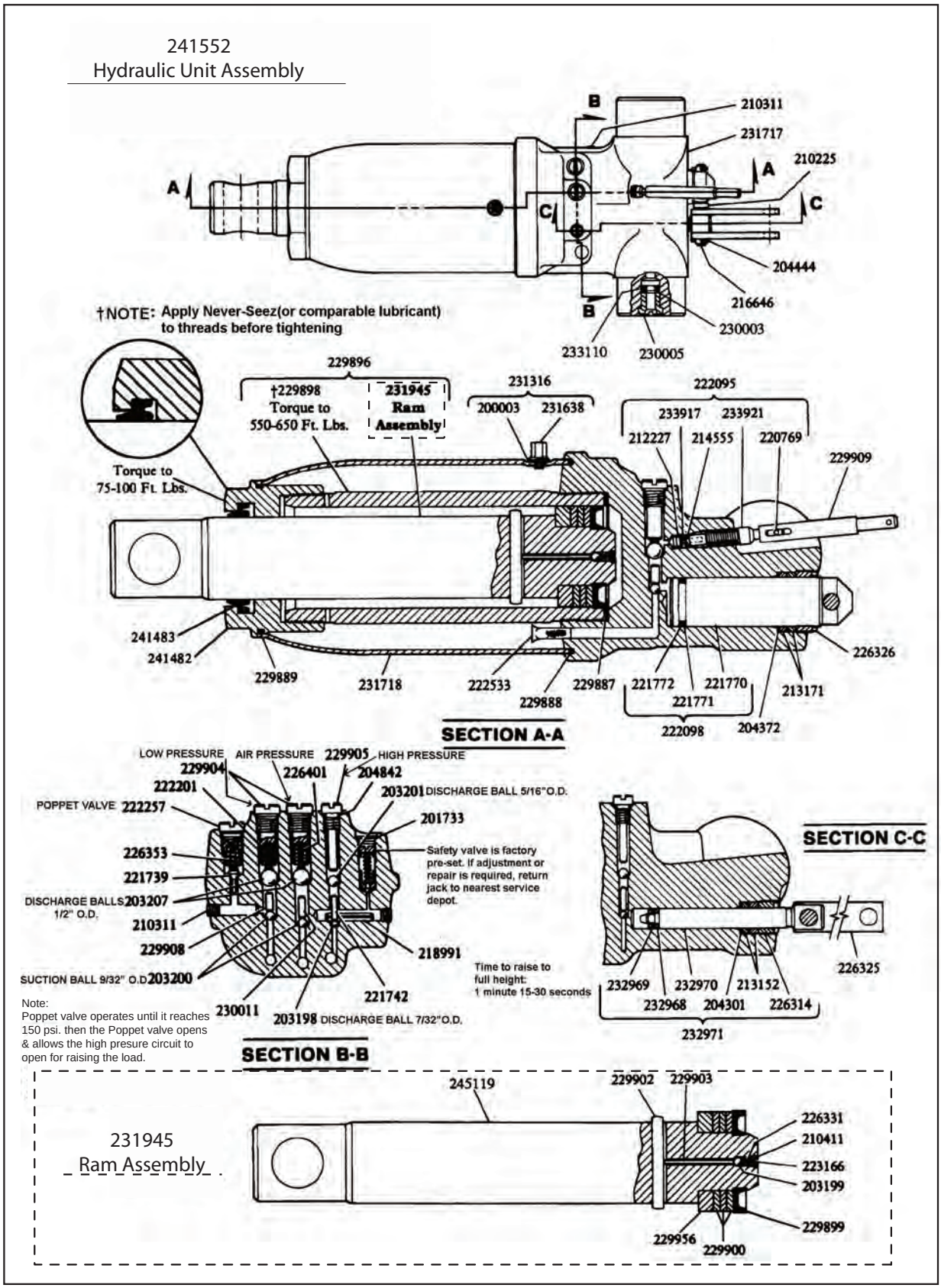

Figure 10 - Parts Illustration for Model HW93662 (Hydraulic Unit)

Model HW93662 Replacement Parts Illustration Part III - Air Hyd. Pump

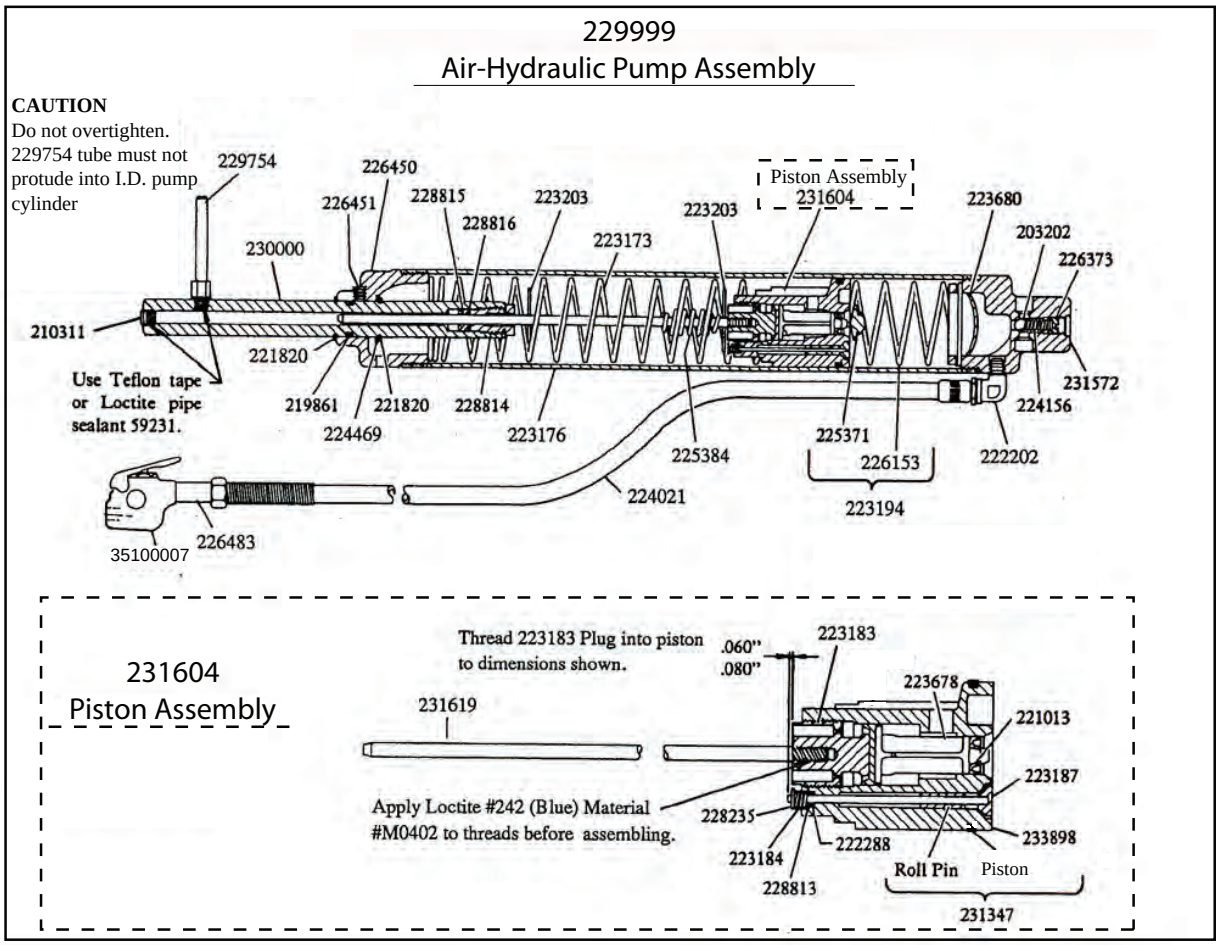

Model HW93662 Replacement Parts List (refer to figures on page 12, 13 & 14)

Part#	Description	Qty	Part#	Description	Qty	Part#	Description	Qty
200003	Gasket	1	203344	Nut	2	214555*	O-ring	1
200472	Bolt	2	204270	Washer	2	214699	Bushing	1
201110	Lockwasher	4	204277	Washer	1	214700	Handle Segment &	1
201115	Lockwasher	2	204301	Washer	1		Bushing	
201481	Lockwasher	2	204303	Washer	1	216645	Pin	1
201733	Expansion Plug	1	204372	Washer	1	216646	Pin	1
201784	Lockwasher	1	204444	Cotter Pin	4	217653	Roll Pin	2
201789	Lockwasher	2	204461	Cotter Pin	1	218988	Roll Pin	1
203198*	Ball (7/32" O.D.)	1	204842*	Gasket	1	218991	Roll Pin	1
203199*	Ball (1/4" O.D.)	1	207169	Nut	2	219861	O-ring	1
203200*	Ball (9/32" O.D.)	1	209964	Lockwasher	2	220769	Cross Pin	1
203201*	Ball (5/16" O.D.)	1	210225	Spacer	1	221013#	U-cup Packing	1
203202	Ball (11/32" O.D.)	1	210311	Pipe Plug	3	221739	Poppet	1
203207*	Ball	1	210411*	Washer	1	221742	Ball Stop Plug	1
203272	Nut	2	211341	Rivet	1	221770	Speed Pump	1
203297	Nut	2	212227	Release Valve	1	221771*	Back-up Washer	1
203299	Nut	2	212689	Bolt	2	221772	Quad Ring	1
203301	Jam Nut	1	213152*	Packing Ring	2	221809	Handle Grip	2
203323	Nut	2	213171*	Packing Ring	2	221820	Retaining Ring	2
203332	Nut	1	214538	Groove Pin	4	221937	Release Knob	1

...Continue on next page (page 15)

Model HW93662 Replacement Parts List (Cont.)

Part#	Description	Qty
221938	Roll Pin	1
222095	Release Stem Assy.	1
222098	Speed Pump Assy.	1
222201*	Spring	1
BJ479096	Elbow	1
222257	Plug	1
222288#	O-ring	1
222533*	Screen	2
223166*	Screen	1
223172	Hose Clip	1
223173	Return Spring	1
223176	Cylinder, Air	1
223179	Hose Clip	2
223183	Plug	1
223184	Spring	1
223187#	Valve & Plunger	1
223194	Spring & Cushion	1
223203	Trip Washer	2
223220	Handle & Cross Bar	1
223678	Packing & Piston	1
223680	Screen	1
224021	Hose, Air	1
224081	Screw	2
224156	Spring	1
224469	Washer	1
225371	Rubber Cushion	1
225384	Trip Spring	1
225906	Bracket, Speed pak	1
226153	Spring	1
226271	Fulcrum Pin	1
226314	Gland Nut	1
226318	Grease Fitting	5
226325	Pump Link	2
226326	Gland Nut	1
226331	Spring	1
226353*	Spring	1
226366	Bolt	1
226372	Plunger Spring	1
226373	Adjusting Screw	1
226401	Spring	1
226450	End Block	1
226451	Set Screw	2
226483	Pipe Nipple	1
227397	Link	1
227436	Turning Rod Assy.	1

Part#	Description	Qty
227713	Lockwasher	1
228235	Cotter Pin	1
228813	Washer	1
228814#	Gland Nut	1
228815#	U-cup Packing	1
228816#	Washer	1
228875	Spring	1
229754	Pin	1
229887*	O-ring	1
229888*	O-ring	1
229889*	O-ring	1
N/A	Ram & Cylinder Assy.	1
229898	Cylinder	1
229899*	U-cup Packing	1
229900*	Back-up Washer	1
229902	Cross Pin	1
229903	Pin	1
229904	Plug	1
229905	Plug	1
229908	Spacer	1
229909	Slotted Tube	1
229910	Retaining Ring	2
229911	Retaining Ring	2
229912	Washer	4
N/A	Bell Crank	1
231963	Front Wheel	2
229927	Cap Housing	1
229929	Bearing	1
229932	Spring	2
229933	Plate	2
229934	Pin	1
229938	Pin	1
229939	Front Axle	1
229946	Pin	1
229947	Retaining Ring	4
N/A	Handle Socket	1
229951	Extension Rod	1
229952	Plunger Assy.	1
229956	Heel Plate	1
229999	Air Hyd. Pump Assy.	1
230000	Pump Cylinder	1
230003	Back-up Washer	1
230005	Gland Nut	1
230006	Bumper Pin	1
230007	U-bolt	1

Part#	Description	Qty
230008	Bracket	1
230010	Caster	2
230011	Spacer	1
230407	Universal Assy.	1
231316	Filler Plug & Gasket Assy.	1
231347	Piston & Roll Pin	1
231419	Fulcrum Pin	1
231420	Bolt	2
N/A	Parallel Link	2
N/A	Bell Crank & Fittings	1
231572	Cylinder Cap	1
231604	Piston Assy.	1
231619	Rod, Pump	1
231638	Filler plug & Vent Valve	1
231733	Base	1
231718	Oil Tank	1
231945	Ram Assy.	1
231963	Front Wheel Assy.	2
231990	Handle Assy.	1
232619	Lifting Cap	1
232620	Swivel Pin	1
232968*	Back-up Washer	1
232969*	U-cup Packing	1
232970	Pressure Pump	1
232971	Pressure Pump & Gland Packing Assy.	1
233110	Pump U-cup	1
233622	Screw	4
233897	Ring, Sealing	1
233917	Plastic Spring	1
233921	Release Stem	1
240564	Repair Kit (Air Pump)	-
240616	Repair Kit (Hyd. Unit)	-
241482	Tank Nut	1
241483*	Seal	1
241552	Hydraulic Unit Assy.	1
244253	Cover	1
244317	Pin	1
245119	Ram	1
35100007	Air Valve	1

HW93662-K0 Label Kit (not shown)
HW93657-M0 Manual

(*) Items included in Repair Kit 240616
(#) Items included in Repair Kit 240564

Model HW93667 Replacement Parts Illustration Part I (refer to parts list on page 18)

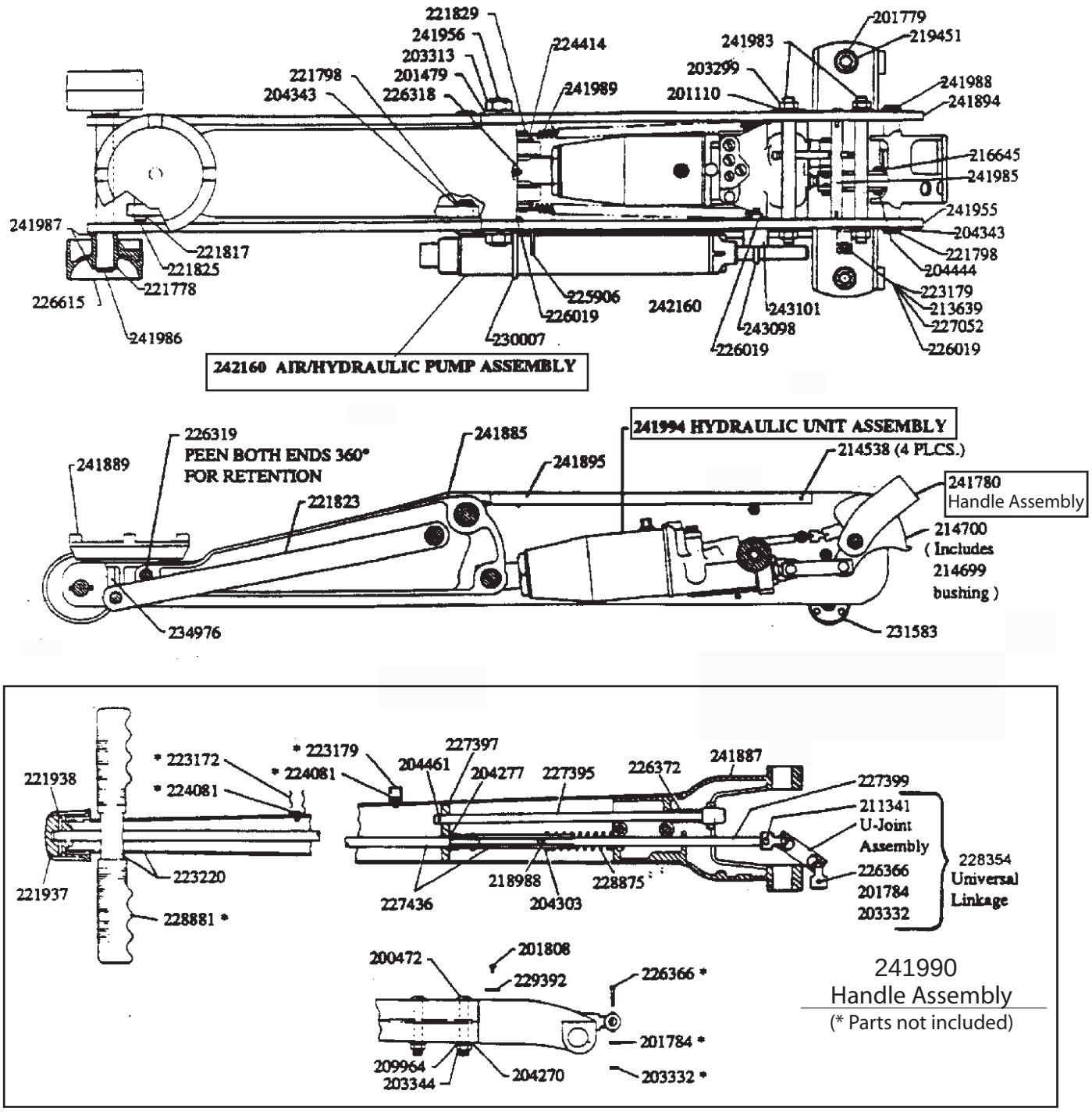

Figure 12 - Parts Illustration for Model HW93667

Model HW93667 Replacement Parts Illustration Part II - Hyd. Unit (refer to parts list on page 18)

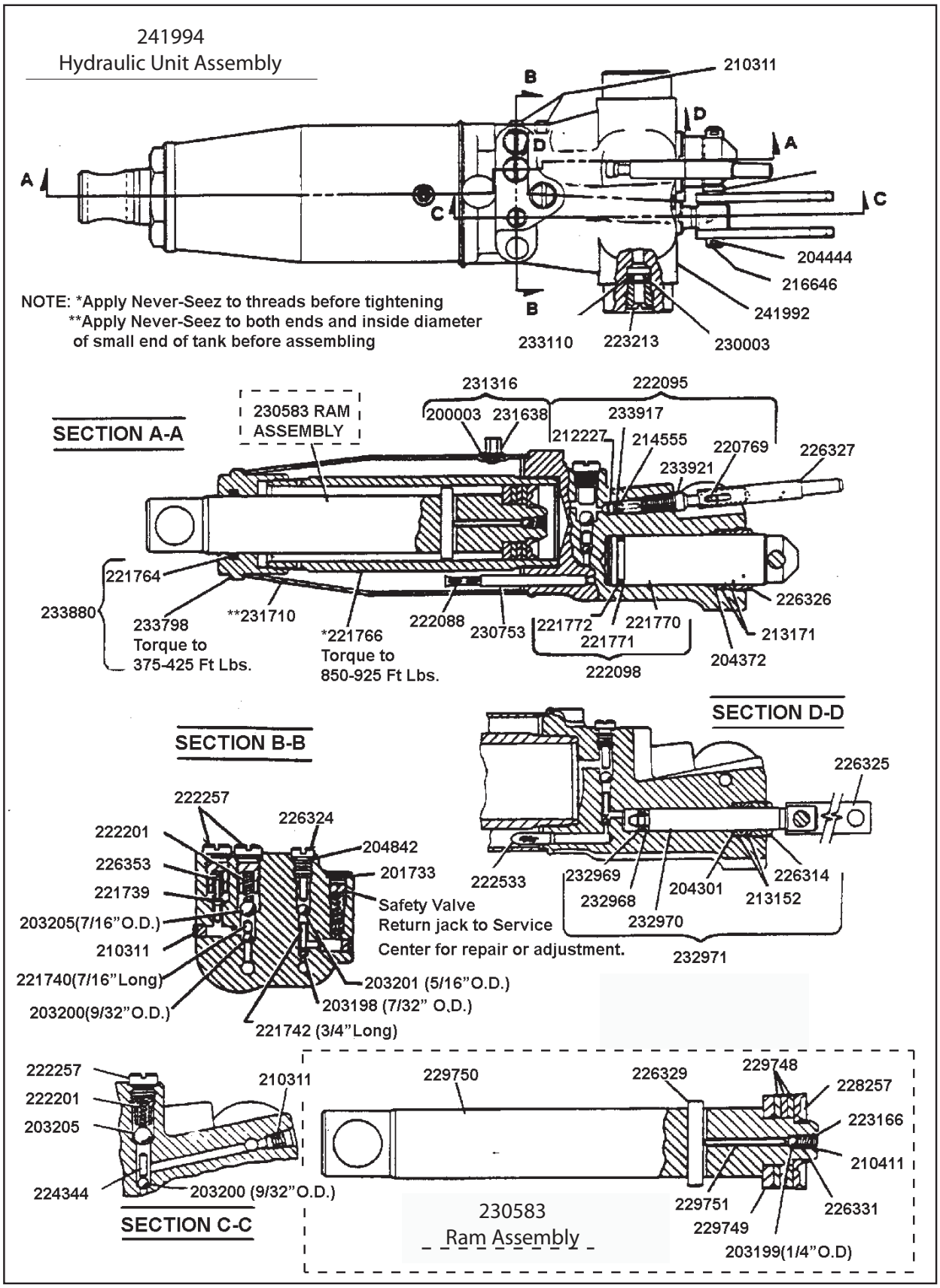

Figure 13 - Parts Illustration for Model HW93667 (Hyd. Unit)

Model HW93667 Replacement Parts Illustration Part III - Air Hyd. Pump

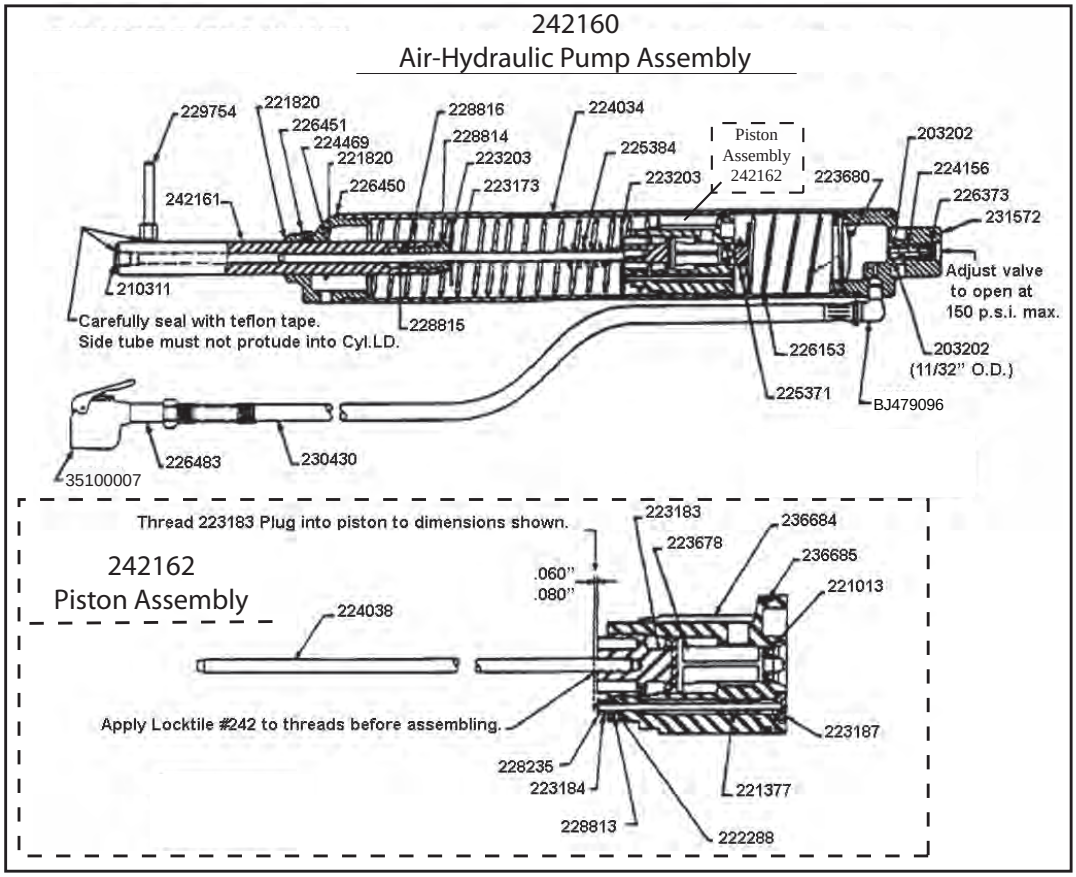

Figure 14 - Parts Illustration for Model HW93667 (Air Hyd. Pump)

Model HW93667 Replacement Parts List (refer to figures on page 16, 17 & 18)

Part#	Description	Qty	Part#	Description	Qty	Part#	Description	Qty
200003*	Gasket	1	204301	Washer	1	216645	Pin	1
200472	Screw	2	204303	Washer	1	216646	Pump Pin	1
201110	Lockwasher	4	204343	Washer	4	218988	Roll Pin	1
201479	Lockwasher	2	204372	Washer	1	219451	Hex Nut	2
201733	Plug	1	204444	Cotter Pin	3	220769	Cross Pin	1
201779	Lockwasher	2	204461	Cotter Pin	1	221013#	U-cup Packing	1
201784	Lockwasher	1	204842*	Copper Gasket	1	221377	Roll Pin	1
N/A	Rivet	2	209964	Lockwasher	2	221739*	Poppet	1
203198*	Ball (7/32" O.D.)	1	210225	Spacer	1	221740	Ball Stop Plug (7/16" L)	1
203199*	Ball (1/4" O.D.)	1	210311	Pipe Plug	4	221742	Ball Stop Plug (3/4" L)	1
203200*	Ball (9/32" O.D.)	1	210411*	Washer	1	221764*	Ram Quad Ring	1
203201*	Ball (5/16" O.D.)	1	211341	Rivet	1	N/A	Cylinder	1
203202	Ball (11/32" O.D.)	1	212227	Release Valve	1	221770	Low Pressure Pump	1
203205*	Ball (7/16" O.D.)	1	213152*	Packing Ring	2	221771*	Washer	1
203299	Jam Nut	4	213171*	Packing Ring	2	221772*	Quad ring	1
203313	Jam Nut	2	213639	Bolt	1	221778	Washer	2
203332	Nut	1	214538	Groove Pin	4	221798	Retainer Ring	4
203344	Jam Nut	2	214555*	O-ring	1	221817	Retainer Ring	2
204270	Washer	2	214699	Bushing	1	221820	Retaining Ring	1
204277	Washer	1	214700	Handle Segment Assy.	1	N/A	Parallel Link	2

...Continue on next page (page 19)

Model HW93667 Replacement Parts List (cont.)

Part#	Description	Qty
234696	Parallel Link Pin	1
221829	Pin	1
221937	Turning Knob	1
221938	Roll Pin	1
222088	Screen Assembly	1
222095	Release Stem Kit	1
222098	Speed Pump Assy.	1
222201*	Spring	1
BJ479096	Elbow	1
222257	Plug Poppet Valve	2
222288#	O-ring	1
222533*	Screen	2
223166*	Ram Screen	1
223172	Hose Clip	1
223173	Return Spring	1
223179	Hose Clip	2
223183	Plug	1
223184	Spring	1
223187#	Valve & Plunger	1
223203	Trip Washer	2
223213	Gland Nut	1
223220	Handle & Cross Bar	1
223678	Packing & Piston	1
223680	Screen	1
224034	Air Cylinder	1
224038	Pump Rod	1
224081	Screw	3
224156	Spring	1
224344	Ball Stop Plug	1
224414	Retaining Ring	1
224469	Washer	1
225371	Rubber Cushion	1
225384	Trip Spring	1
225906	Bracket, Speed Pak	1
226019	Lock Nut	4
226153	Spring	1
226314	Gland Nut	1
226318	Grease Fitting	1
N/A	Bellcrank Pin	1
226324	Pressure Plug	1
226325	Pump Link	2
226326	Nut	1
226327	Slotted Tube	1
226329	Pin	1
226331*	Spring	1

Part#	Description	Qty
226353*	Spring	1
226366	Hex Head Bolt	1
226372	Spring	1
226373	Adjusting Screw	1
N/A	End block	1
226451	Set Screw	2
226483	Pipe Nipple	1
226615	Front Wheel	2
227052	Washer	1
227395	Plunger Assy.	1
227397	Release Link	1
227399	Extension Rod	1
227436	Turning Rod Assy.	1
228235	Cotter Pin	1
228257*	U-cup	1
228354	Universal Linkage	1
228813	Washer	1
228814#	Gland Nut	1
228815#	U-cup Packing	1
228816#	Washer	1
228875	Spring	1
228881	Grip	2
N/A	Serial plate	1
229748*	Heel Plate	3
229749	Washer	1
229750	Ram	1
229751	Pin	1
229754	Extension Tube	1
230003*	Back-up Washer	1
230007	U-bolt	1
230430	Air Hose Assy.	1
230583	Ram Assy.	1
230753	Suction Tube	1
231316	Vent Valve Assy.	1
N/A	Cylinder Cap	1
231583	Rear Caster	2
231638	Filler Screw	1
231710	Oil Tank	1
232968*	Back-up Washer	1
232969*	U-cup	1
232970	Pressure Pump	1
232971	Pressure Pump Kit	1
233110	Pump U-cup	1
233798	Tank Nut	1
N/A	Tank Nut & Quad Ring	1

Part#	Description	Qty
233917*	Plastic Spring	1
233921	Release Stem	1
234976	Cap Housing	1
236684	Piston	1
236685	Sealing Ring	1
240564	Repair Kit (Hyd. Pump)	1
241990	Handle	1
N/A	Bellcrank	1
241887	Handle Socket	1
241889	Lift Cap	1
N/A	Sideplate Assy	1
241895	Hydraulic Unit Cover	1
241907	Repair Kit (Hyd. Unit)	-
N/A	Sideplate Assy	1
241982	Fulcrum Pin	1
241983	Sideplate Tie Rod	2
241985	Support Rod	1
241986	Front Axle	1
241987	Retainer Ring	4
241988	Handle Pivot Pin	1
241989	Extension spring	2
241992	Hydraulic Unit Casting	1
241994	Hydraulic Unit Assy.	1
242160	Air Hyd. Pump Assy.	1
242161	Pump Cylinder	1
242162	Piston Assembly	1
243098	U-bolt	1
243101	Sleeve	1
35100007	Air Valve	1

HW93667-K0 Label Kit (not shown)
HW93657-M0 Manual

(*) Items included in Repair Kit 241907
Items included in Repair Kit 240564

TWO YEARS LIMITED WARRANTY

For a period of two (2) years from date of purchase, SFA Companies will repair or replace, at its option, without charge, any of its products which fails due to a defect in material or workmanship under normal usage. This limited warranty is a consumer's exclusive remedy.

Performance of any obligation under this warranty may be obtained by returning the warranted product, freight prepaid, to SFA Companies Warranty Service Department, 10939 N. Pomona Ave., Kansas City, MO 64153.
Except where such limitations and exclusions are specifically prohibited by applicable law:

(1) THE CONSUMER'S SOLE AND EXCLUSIVE REMEDY SHALL BE THE REPAIR OR REPLACEMENT OF DEFECTIVE PRODUCTS AS DESCRIBED ABOVE
(2) SFA COMPANIES SHALL NOT BE LIABLE FOR ANY CONSEQUENTIAL OR INCIDENTAL DAMAGE OR LOSS WHATSOEVER.
(3) ANY IMPLIED WARRANTIES, INCLUDING WITHOUT LIMITATION THE IMPLIED WARRANTIES OF MERCHANTABILITY AND FITNESS FOR A PARTICULAR PURPOSE, SHALL BE LIMITED TO TWO YEARS, OTHERWISE THE REPAIR, REPLACEMENT OR REFUND AS PROVIDED UNDER THIS EXPRESS LIMITED WARRANTY IS THE EXCLUSIVE REMEDY OF THE CONSUMER, AND IS PROVIDED IN LIEU OF ALL OTHER WARRANTIES, EXPRESS OR IMPLIED.
(4) ANY MODIFICATION, ALTERATION, ABUSE, UNAUTHORIZED SERVICE OR ORNAMENTAL DESIGN VOIDS THIS WARRANTY AND IS NOT COVERED BY THIS WARRANTY.

Some states do not allow limitations on how long an implied warranty lasts, so the above limitation may not apply to you. Some states do not allow the exclusion or limitation of incidental or consequential damages, so the above limitation or exclusion may not apply to you. This warranty gives you specific legal rights, and you may also have other rights which vary from state to state.

SFA Companies
10939 N. Pomona Ave. Kansas City, MO 64153
816-891-6390
customerservices@heinwerner-automotive.com