ENERPAC

Repair Parts Sheet

JSH-1003

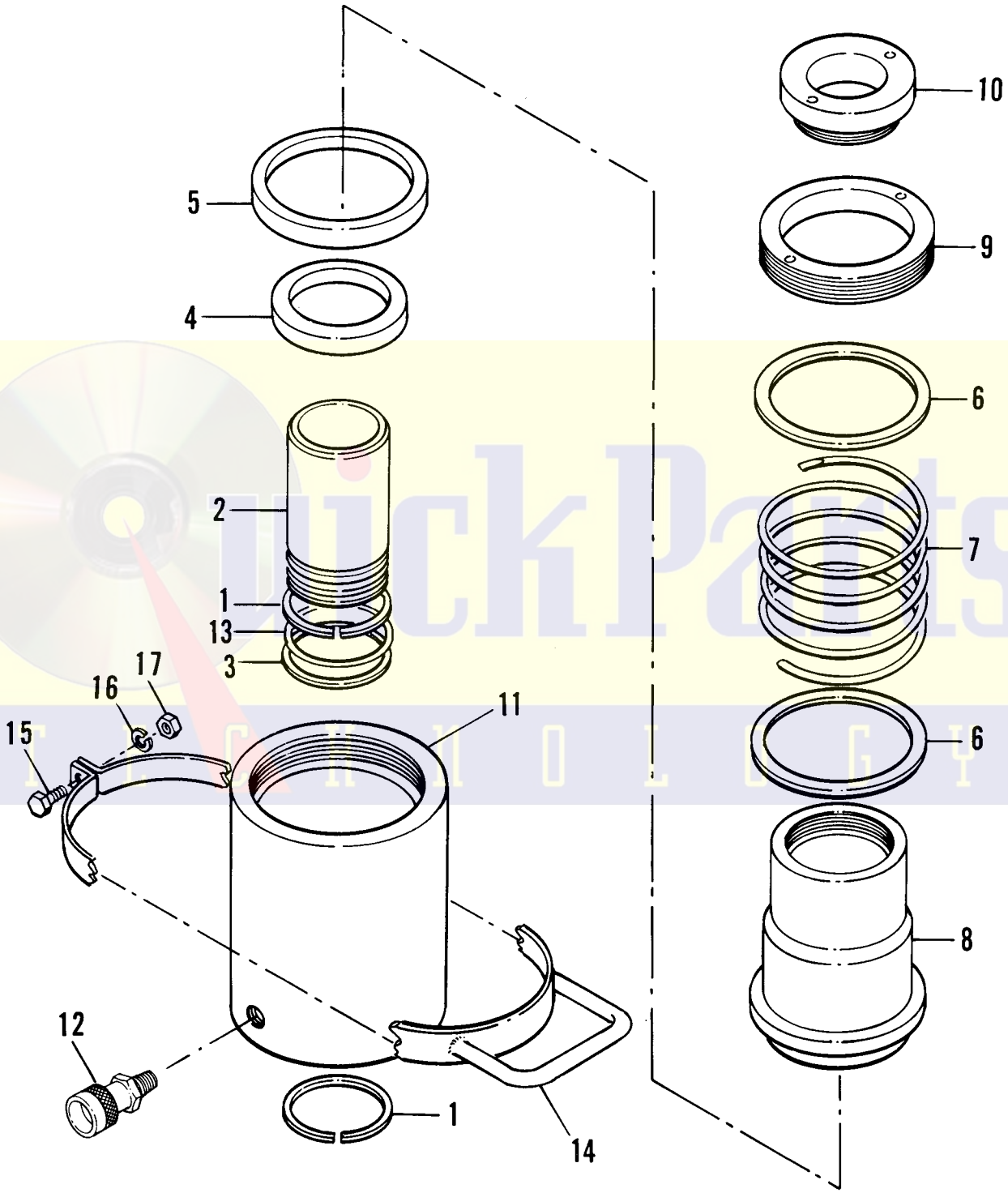

QuickParts TECHNOLOGY

TO PROTECT YOUR WARRANTY, USE ONLY ENERPAC HYDRAULIC OIL.

PARTS LIST

Item Number	Part Number	Description	Qty.
1	*BSS5999D	Circlip	2
2	CM89.013	Guide, Plunger	1
3	*B1240.564	Ring, Back-Up	1
4	*BSS5875D	Seal, Inner	1
5	*BSS5876D	Seal, Outer	1
6	BSS6400D	Washer	2
7	*BSS1796D	Spring, Return	1
8	BSS1793D	Plunger	1
9	BSS1794D	Ring, Stop	1
10	BSS1746D	Saddle, Hollow	1
11	CM88.030	Cylinder	1
12	CR-4000	Coupler	1
13	*B1240.503	O-Ring	1
14	BSS5889D	Handle Assembly	1
15	CBS1071.028	Screw	1
16	BSS5703D	Lockwasher	1
17	CBS1005.123	Nut	1

*Indicates Items in Repair Kit RCH-1003K

QuickParts TECHNOLOGY

REPAIR AND SERVICE INSTRUCTIONS: For repair service and parts contact your nearest ENERPAC Authorized Technical Service Center. The ENERPAC Technical Service Center will provide complete and prompt service on all ENERPAC products.

PARTS AND SERVICE: For quality workmanship and genuine ENERPAC parts, select an Authorized ENERPAC Technical Service Center for your repair needs. Only repairs performed by an Authorized Service Center displaying the official ENERPAC sign are backed with full factory warranty. The Classified Section in Your Phone Book lists your nearest Franchised Service Center.

WARRANTY: ENERPAC warrants its product against defects in workmanship and materials for 90 days from date of delivery to user. Chain is not warranted. Warranty does not cover ordinary wear and tear, abuse, misuse, overloading, altered products or use of improper fluid.

WARRANTY RETURN PROCEDURE: When question of warranty claim arises, the user should send his unit to the nearest ENERPAC Authorized Technical Service Center for inspection, transportation to be prepaid and evidence of purchase date furnished. If the claim comes under the terms of our warranty, the Authorized Technical Service Center will REPAIR OR REPLACE PARTS AFFECTED and return prepaid.

ENERPAC®

ENERPAC, BUTLER, WISCONSIN 53007 DIVISION OF APPLIED POWER INC. TELEPHONE (414) 781-6600 TELEX 2-6682

PRINTED IN U.S.A. MARCAS REGS

L-1135 9/84