BLACKHAWK

GENERAL SERVICE EQUIPMENT

Repair Parts Information

Hydraulic Presses

MODELS AP-25 & AP-50

CAPACITIES: AP-25: 25 TON
AP-50: 50 TON

HYDRAULIC POWER UNIT
K96.900

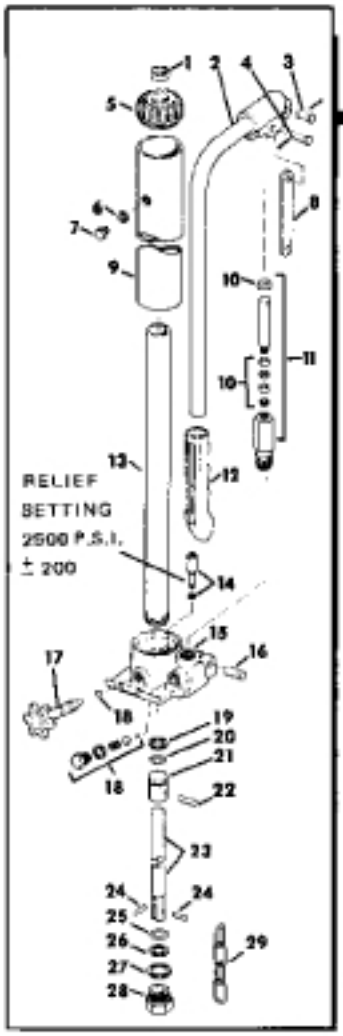

MODEL AP-50

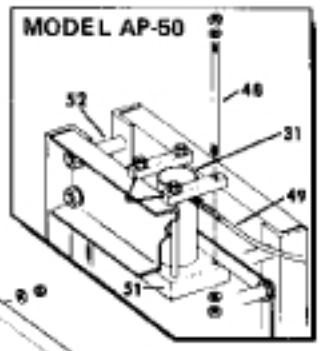

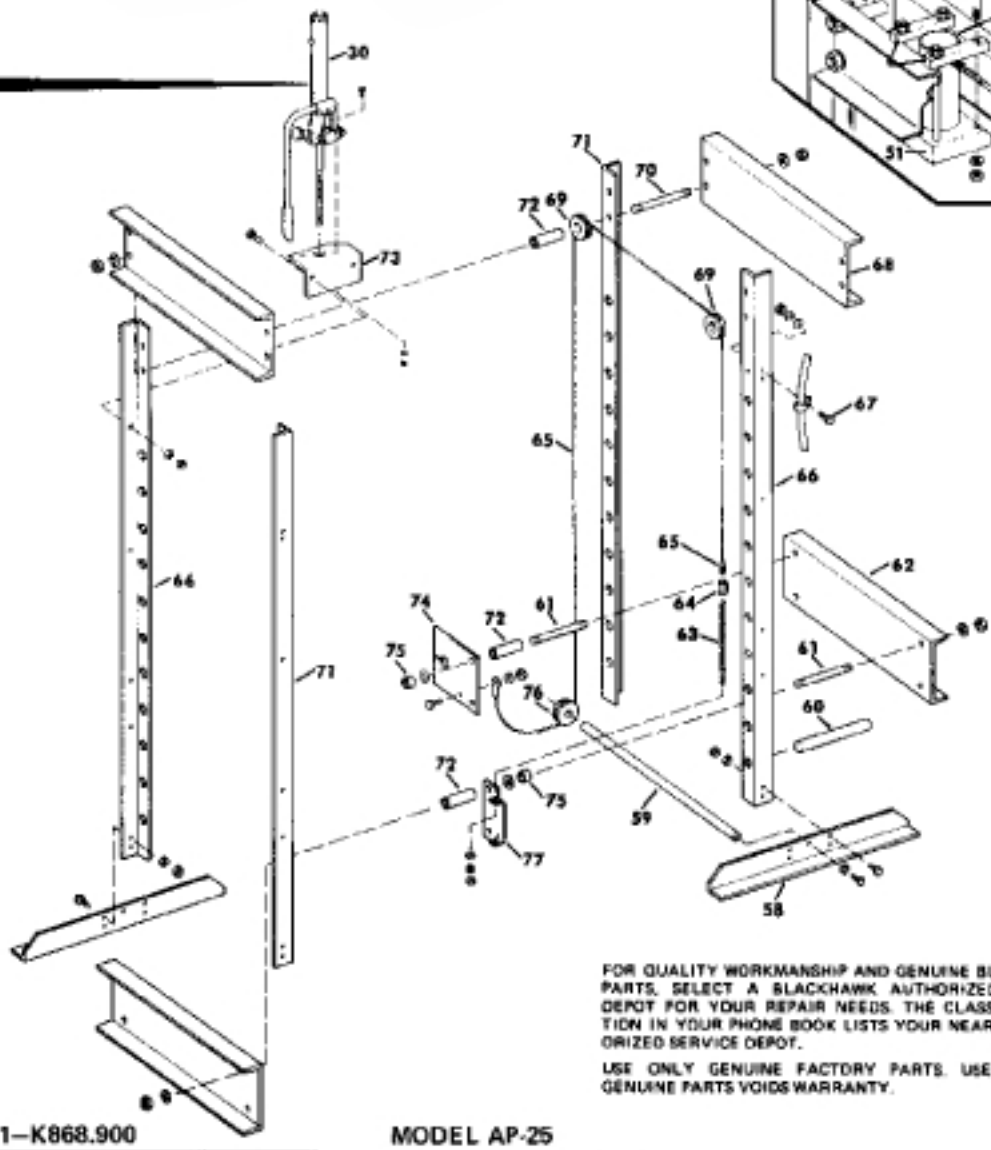

FOR QUALITY WORKMANSHIP AND GENUINE BLACKHAWK PARTS, SELECT A BLACKHAWK AUTHORIZED SERVICE DEPOT FOR YOUR REPAIR NEEDS. THE CLASSIFIED SECTION IN YOUR PHONE BOOK LISTS YOUR NEAREST AUTHORIZED SERVICE DEPOT.

USE ONLY GENUINE FACTORY PARTS. USE OF NON-GENUINE PARTS VOIDS WARRANTY.

31–K914.900

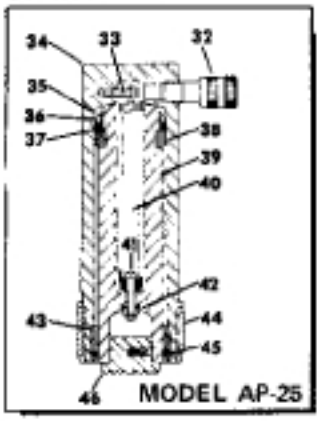

MODEL AP-25

31–K868.900

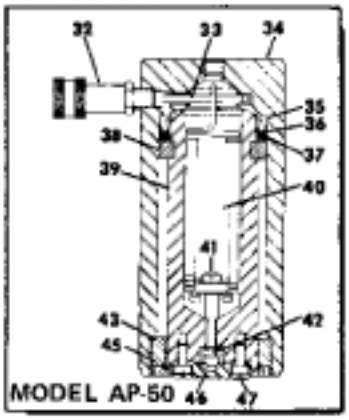

MODEL AP-50

MODEL AP-25

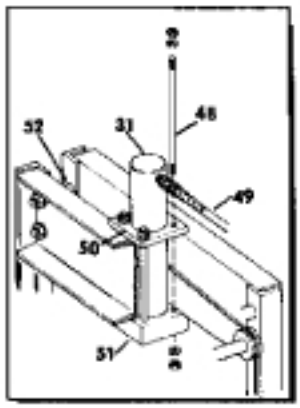

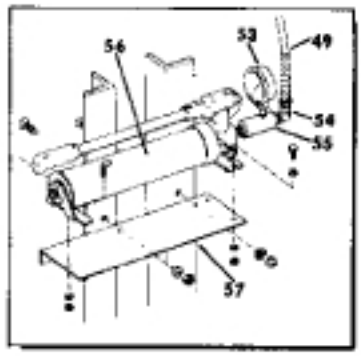

REPAIR PARTS LIST

ITEM NO.	AP-25 PART NO.	NO. REQ.	AP-50 PART NO.	NO. REQ.	DESCRIPTION
1	F960.006	1	F960.006	1	Plug
2	K18.070	1	K18.070	1	Handle w/Grip
3	TC7.57	1	TC7.57	1	Pin
*	1.58	2	1.58	2	Cotter Pin
4	J19.57	1	J19.57	1	Pin
5	K982.020	1	K982.020	1	Cap
* 6	C9.37	1	C9.37	1	Gasket
7	C9.22-2	1	C9.22-2	1	Plug
8	BA85.62-2	1	BA85.62-2	1	Link
9	K996.025	1	K996.025	1	Reservoir
*10	U30X-3	1	U30X-3	1	Pump Kit
11	K584.900	1	K584.900	1	Pump
12	B525.550	1	B525.550	1	Grip
13	J19.30	1	J19.30	1	Cylinder
14	C949.900	1	C949.900	1	Relief Valve
*	S3.037	1	S3.037	1	Gasket
15	F438.005	1	F438.005	1	Base
16	K494.061	1	K494.061	1	Pin
17	K2.010	1	K2.010	1	Valve w/Knob
*18	U30X-4	1	U30X-4	1	Valve Kit
*19	M761.562	1	M761.562	1	Wiper
*20	M760.041	1	M760.041	1	"O" Ring
21	C644.051	1	C644.051	1	Piston
22	C643.061	1	C643.061	1	Pin
23	F578.040	1	F578.040	1	Plunger
24	M87.061	2	M87.061	2	Pin
*25	C213.167	1	C213.167	1	Gasket
*26	F752.041	1	F752.041	1	"O" Ring
*27	B269.562	1	B269.562	1	Wiper
28	C170.055	1	C170.055	1	Nut
29	G49.066	1	G49.066	1	Chain
30	K96.900	1	K96.900	1	Power Unit (Less Items 2, 8, 28)
*	K96.900X	*	K96.900X	*	Repair Kit (Jack Only)
	(K96.900X Kit includes those items from 1—30 with an asterisk.)				
31	K914.900	1	K868.900	1	Ram
32	K4.034	1	K4.034	1	Coupler (Ram Half)
33	G836.028	1	L344.061	1	Anchor
34	G892.005	1	L351.030		Base
35	G908.044	1	L399.044	1	Ring
	G905.108	1	L340.108	1	Washer
*36	L775.041	1	L338.041	1	Cup
*37	G906.108	1	L337.108	1	Wiper
	G907.108	1	L343.108	1	Washer
38	G898.107	1	L341.107	1	Bearing
39	G895.040	1	L347.040	1	Plunger
40	L119.110	1	R210.184	1	Spring
41	F958.028	1	R210.143-1	1	Screw
41	F948.209	1	R210.155-1	1	Bushing
42	G833.055	1	L342.055	1	Nut
*	G834.167	1	B180.167	1	Gasket
43	G899.044	1	K13.044	1	Ring
44	R158.271	1			Protector
*45	G731.044	1	G732.044	1	Wiper
46	L623.045	1	L345.045	1	Saddle
47			L661.028	2	Screw
*	K914.900X	*	K868.900X	*	Repair Kit (Ram Only)
	(Kits K914.900X and K868.900X include those items from 31 to 47 with an asterisk.)				
48	M334.305	4	M339.305	4	Stud
49	K1.646	1	K1.646	1	Hose
†	K3.034	1	K3.034	1	Coupler (Hose End)
†	K2.034	1	K2.034	1	Coupler (Complete)
50	M750.101	2	M337.145	2	Plate
51	M332.101	1	M341.101	1	Block
52	M131.186	4	M141.186	4	Spacer
53	K860.023	1	K860.023	1	Gage
54	K2.291	1	K2.291	1	Elbow
55	K5.038	1	K5.038	1	Adapter
56	K93.900	1	K93.900	1	Pump
	(Repair parts for K93.900 pump are shown on P-420 Parts Sheet, PS-437)				
57	M491.111	1	M491.111	1	Bracket
58	M126.630	2	M136.630	2	Foot
59	M200.149	1	M201.149	1	Rod
60	M128.149	2	M139.149	2	Rod
61	M129.305	4	M218.305	4	Stud
62	M130.634	2	M144.634	2	Channel
63	M451.305	1	M451.305	1	Stud
64	M452.034	1	M452.034	1	Coupler
65	M212.647	1	M212.647	1	Rope
66	M125.630	2	M135.630	2	Leg, L.H.
67	M495.017	1	M495.017	1	Strap
68	M124.634	2	M134.634	2	Channel
69	M205.106	2	M206.106	2	Pulley
70	M129.305	4	M140.305	4	Stud
71	M177.630	2	M193.630	2	Leg, R.H.
72	M132.186	4	M142.186	4	Spacer
73	G62.111	1	G51.111	1	Bracket
74	G100.101	1	G94.101	1	Plate
75	M264.186	4	M264.186	4	Spacer
76	M205.106	1	M206.106	1	Pulley
77	M488.101	1	M489.101	1	Anchor
†78	AP25.999X		AP50.999X		Hardware Kit
†79	K821.026X		K822.026X		Decal Kit
†80	P420X-1		P420X-1		Repair Kit (K93.900)
†81	E740.026		E740.026		Decal (Repair)

† Not Shown

***NOTE:** Orders for parts cannot be filled unless both model and serial number with prefix imprinted on nameplate are given.*