ADVANCED TOOL DESIGN

Hydraulic Transmission Jacks

Operating Instructions & Parts Manual

Model Number	Capacity
Atd-7430	***1000 lb.***
Atd-7431 (Air Actuated Model)	***1000 lb.***

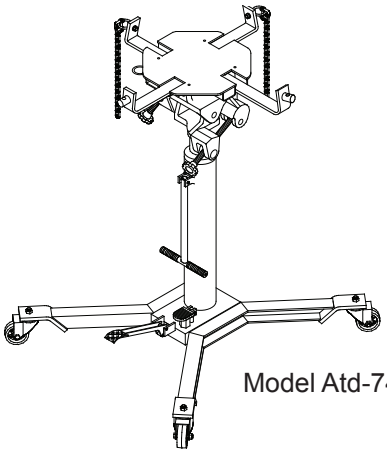

Model Atd-7430

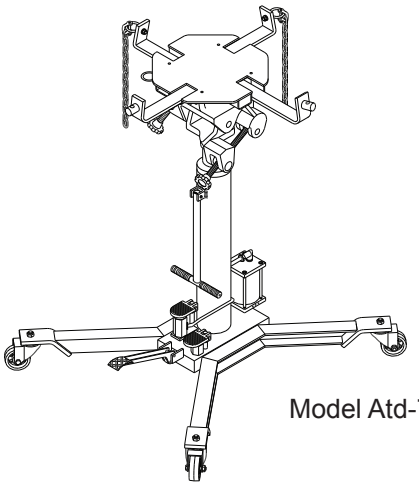

Model Atd-7431

This is the safety alert symbol. It is used to alert you to potential personal injury hazards. Obey all safety messages that follow this symbol to avoid possible injury or death.

⚠ ADVERTENCIA

- Leer, comprender, y seguir las instrucciónes antes de utilizar el aparato.
- El manual de instrucciónes y la información de seguridad deben estar comunicado en lengua del operador antes del uso.
- No seguir estas indicaciónes puede causar daños personales o materiales.

⚠ WARNING

To avoid **crushing and related injuries**:

NEVER work on, under or around a load supported only by a hydraulic jack. **Immediately** transfer the load to an appropriate work station.

Atd Tools Inc.
160 Enterprise Drive, Wentzville MO 63385

ATD7430-0309
Printed in Taiwan

SAFETY and GENERAL INFORMATION

Save these instructions. For your safety, read, understand, and follow the information provided with and on this jack before using. The owner and operator of this equipment shall have an understanding of this jack and safe operating procedures before attempting to use. The owner and operator shall be aware that use and repair of this product may require special skills and knowledge. Instructions and safety information shall be conveyed in the operator's native language before use of this jack is authorized. If any doubt exists as to the safe and proper use of this jack, remove from service immediately.

Inspect before each use. Do not use if broken, bent, cracked or damaged parts are noted. Any jack that appears damaged in any way, or operates abnormally shall be removed from service immediately. If the jack has been or suspected to have been subjected to a shock load (a load dropped suddenly, unexpectedly upon it), immediately discontinue use until jack has been checked by a factory authorized service center (contact distributor or manufacturer for list of authorized service centers). It is recommended that an annual inspection be done by qualified personnel. Labels and Operator's Manuals are available from manufacturer.

PRODUCT DESCRIPTION

Atd Tools Hydraulic Transmission Jack is designed to be used as an aid in the removal and installation of automotive and light truck transmissions, transfer cases and transaxles. This telescopic style transmission jack is for use under an overhead lift or in a garage pit. On air option model Atd-7431, ensure that your air source can dedicate 7.8 CFM @ 110-175 psi to each jack operated.

***NEVER** use for any purpose other than those uses outlined above!*

SPECIFICATIONS

Model	Capacity	Min. Height	Max. Height	Saddle Base	Extended Saddle Area	Jack Size (L x W)
Atd-7430	1000 lb	37-7/8"	77-5/8"	8-7/8" x 7-1/8"	21" x 21"	34-1/8" x 36-1/8"
Atd-7431						

PREPARATION

Assembly *(refer to Figure 1)*

Tools required: 1/4" allen key, 19mm wrench, 3/8" hex socket & torque wrench.

1. Three major parts should be included in the package:
   (a) Hydraulic unit Assembly;
   (b) Saddle Assembly;
   (c) 2 pieces of base half with hardware.
2. Attach either one of the two base halves to the base of the hydraulic unit, then secure using allen head bolts and washers provided. Apply the same procedure to the other base half. Use torque wrench to tighten to 30 lb.ft. Do not overtighten.
3. Place the socket of the saddle assembly onto the ram piston. Tighten set screw on the socket.

Before Use

1. Verify that the product and application are compatible, if in doubt call Atd Tools Technical Service (636) 327-9050.
2. Before using this product, read the operator's manual completely and familiarize yourself thoroughly with the product, its components and recognize the hazards associated with its use.
3. Press the release valve pedal, ensure that saddle is fully lowered. Remove shipping screw and ***replace with*** provided ***vent screw*** *(shipping screw is located above the oil filler screw)*.
4. Remove the oil filler screw. Ensure oil level is just below the rim of oil filler hole. Reinstall the oil filler screw.
5. For air option model Atd-7431, pour a teaspoon of good quality, air tool lubricant into the air supply inlet of the lift control valve. Connect to air supply and operate for 3 seconds to evenly distribute lubricant.

   Note: This unit is equipped with the popular 1/4” NPT air coupler. When installing a different air coupler of your choice, ensure that thread tape or compound is used when servicing connections. To ensure dependable, trouble free operation an inline air dryer and oiler is recommended.
6. Ensure that jack rolls freely. Raise and lower the unloaded jack throughout the lifting range before putting into service to ensure the pump operates smoothly. Replace worn or damaged parts and assemblies with Atd Tools authorized replacement parts only.

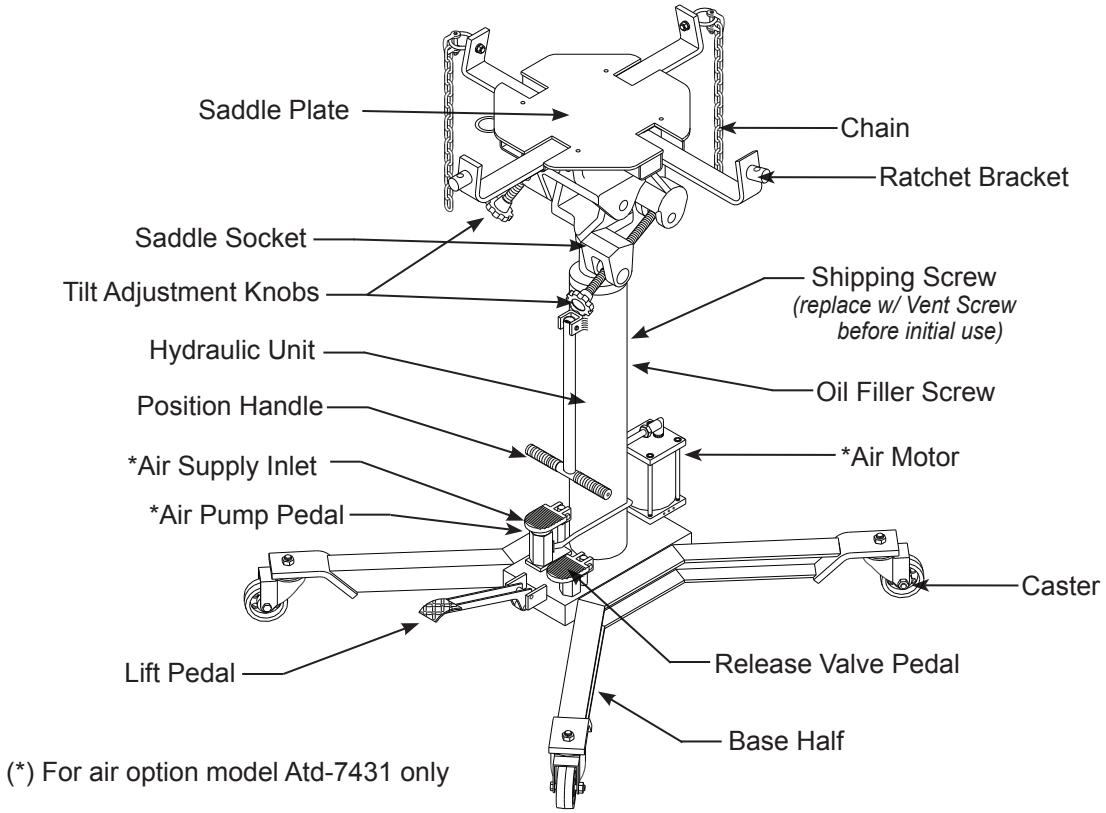

Figure 1- Typical Transmission Jack Components (Atd-7431 shown)

⚠ WARNING

- **Read, understand, and follow** all printed material provided with and on this product **before use**.
- **Do not** exceed rated capacity.
- Use **only** on hard, level surfaces.
- **Adequately support the vehicle before starting repairs.**
- If loaded jack must be moved, make certain that load is secured by appropriate means, is stable, is in the **lowest possible position**, is moved over a smooth, hard level surface and that the l**ifting platform is level**.
- Use of this product is **limited to removal, installation, and transportatio**n of **automotive and light truck transmissions, transfer cases and transaxles**.
- Use only adapters / accessories provided by the manufacturer of this transmission jack.
- Use only adapters / accessories whose **rated capacity is greater** than the rated capacity of this jack.
- Ensure the center of gravity is **center loaded** on the saddle.
- Never use this device as a work/repair station. **Transfer** the **load immediately** to a suitable work station.
- No alteration shall be made to this product.
- **Failure to heed** these markings may **result** in **personal injury and/or property damage**.

⚠ WARNING

To avoid **crushing and related injuries**:

- **Never** work on, under or around a load supported only by hydraulic jack.
- **Be alert** and **sober** when using this product. Do not operate under the influence of drugs or alcohol.

OPERATION

Follow the instruction for removal and installation of transmission, transfer case or transaxle according to the vehicle manufacturer's service manual.

Raise saddle assembly:

Pump foot pedal or press air pump pedal *(Model Atd-7431)* until saddle reaches desired position. Secure load with provided chains.

Note: DO NOT OPERATE BY AIR AND BY HAND PUMPING AT THE SAME TIME.

⚠ *Ensure center gravity of load is centered on the saddle and load is stable before moving jack. An off-center transmission could cause the jack to tip or flip over .*

Lower saddle:

⚠ *Be sure all tools and personnel are clear before lowering load.* ***Slowly engage release valve pedal! Maintain control*** *of the rate of speed at which the load lowers at all times!*

Slowly, gently apply downward pressure to the release valve pedal.

⚠ ***Never*** *use this jack as a workstation!*

MAINTENANCE

Important: Use only good grade hydraulic jack oil. Avoid mixing different types of fluid and NEVER use brake fluid, turbine oil, transmission fluid, motor oil or glycerin. Improper fluid can cause premature failure of the jack and the potential for sudden and immediate loss of load. Mobil DTE 13M or equivalent recommended.

Adding oil

1. With saddle fully lowered, set jack in its upright, level position. Remove oil filler screw.
2. Fill until oil is level with the oil filler screw hole, reinstall oil filler screw.

Changing oil

For best performance and longest life, replace the complete fluid supply at least once per year.

1. With saddle fully lowered, remove oil filler screw.
2. Lay the jack on its side and drain the fluid into a suitable container.

   Note. Dispose of hydraulic fluid in accordance with local regulations.
3. Set jack in its level position. Fill until oil is level with the oil filler screw hole, reinstall oil filler screw.

Lubrication

1. A periodic coating of light lubricating oil to pivot points, axles and hinges will help to prevent rust and assure that casters and pump assemblies move freely.
2. For air option model Atd-7431: When used on a daily basis, air pump model should be internally lubricated before each use. Use only good quality air tool lubricant. If no inline oiler is used, pour a teaspoon of air tool oil into the inlet of the air supply inlet. Simply operate the jack using the air feature in order to fully distribute the oil.

Cleaning

Periodically check the pump piston and ram for signs of rust or corrosion. Clean as needed and wipe with an oily cloth.

Note: Never use sandpaper or abrasive material on these surfaces!

Storage

When not in use, store the jack with saddle fully lowered.

TROUBLESHOOTING

Symptom	Possible Causes	Corrective Action
Jack will not lift load	• Release valve not tightly closed • Load is too heavy	• Ensure release valve tightly closed • Consider higher capacity jack
Jack will lift, but not maintain pressure	• Release valve not tightly closed • Hydraulic unit malfunction	• Ensure release valve tightly closed • Discontinue use, Contact Atd Tools Tech. Service
Jack will not lower after unloading	• Reservoir overfilled • Linkage binding	• Ensure load is removed, then drain fluid to proper level • Clean and lubricate moving parts
Poor lift performance	• Fluid level low • Hydraulic unit malfunction	• Ensure proper fluid level • Discontinue use, Contact Atd Tools Tech. Service
Jack will not lift to full extension	• Fluid level low	• Ensure proper fluid level

REPLACEMENT PARTS *(page 6 & 7)*

Not all components of the jack are replacement items, but are illustrated as a convenient reference of location and position in the assembly sequence. When ordering parts, please give the Model number and parts description. Call or write for current pricing: Atd Tools Inc. 160 Enterprise Drive, Wentzville, MO 63385. Tel: (636) 327-9050 Fax: (636) 327-9044

Replacement Parts for Model Atd-7430 & Atd-74331

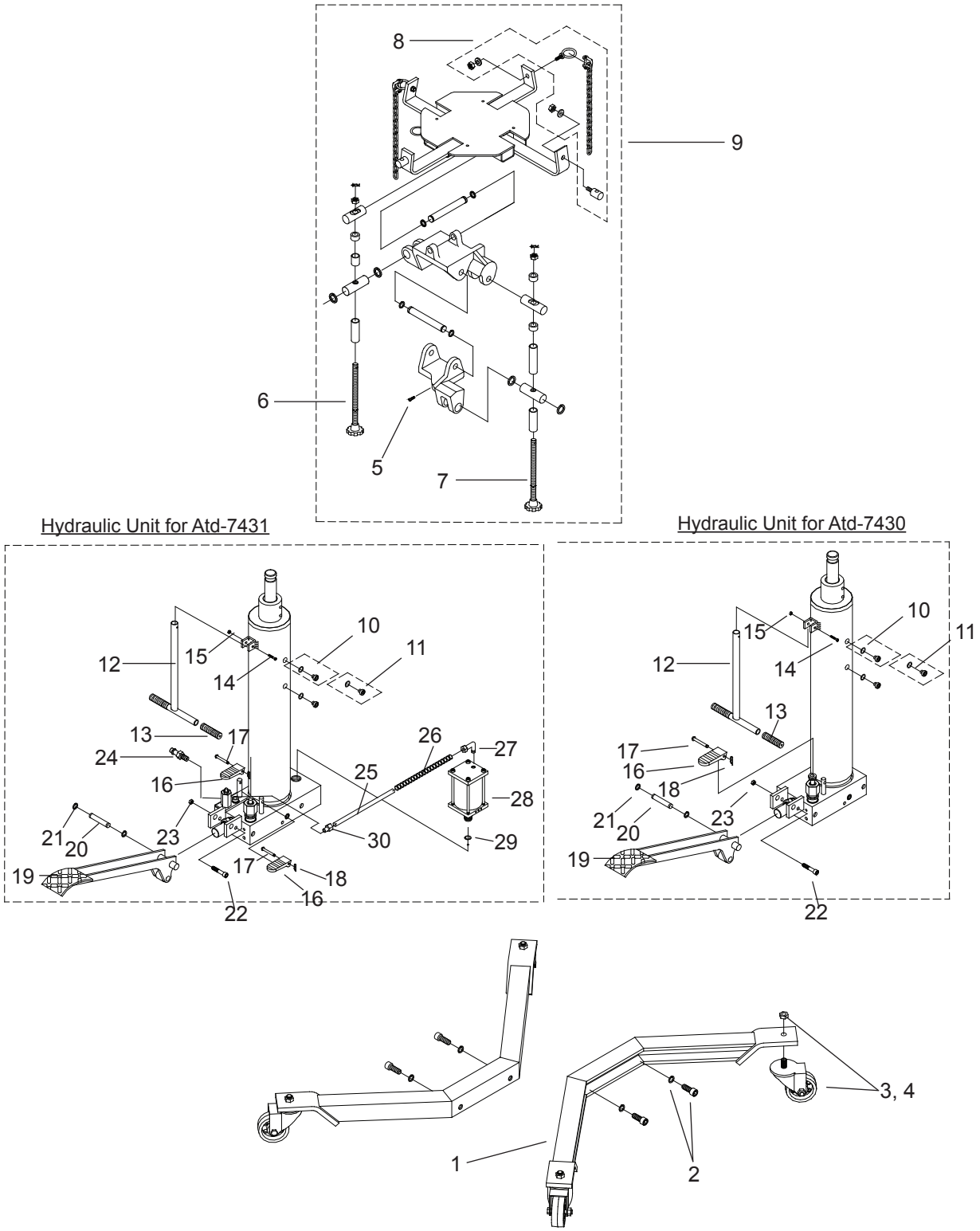

Figure 3 - Replacement Parts Illustration for Models Atd-7430 & Atd-7431

Replacement Parts for Models Atd-7430 & Atd-7431

Item	Part No.	Description	Qty.
1	G36-3-3301-108	Base Half	2
2	G36-3-0511-104	Bolt Set, 1/2"D x 1"L (4 sets)	1
3	G36-3-5000-104	Caster, 3"D	2
4	G36-3-5001-106	Caster w/ Brake	2
5	649-1-0079-105	Socket Head Bolt, 5/16"D x 3/4"L	1
6	G36-3-2300-101	Tilt Screw Assy.	1
7	G36-3-2301-103	Tilt Screw Assy.	1
8	G36-3-0513-108	Accessory Kit	2
9	G36-4-4200-10308	Saddle Assembly (chain not included)	1
10	324-4-1900-208	Screw Assembly	2
11	G36-6-1804-102	Vent Screw Assembly	1
12	G36-3-2100-103	Handle	1
13	506-9-0264-106	Handle Grip	2
14	653-1-0080-409	Bolt	1
15	651-2-0080-125	Nut	1
16	G36-6-1809-102	Pedal *(2pc. for Atd-7431)*	1
17	566-4-0070-202	Pin *(2pc. for Atd-7431)*	1
18	513-4-0016-018	Retaining Pin *(2pc. for Atd-7431)*	1
19	G36-3-1900-100	Lift Pedal	1
20	G37-6-1603-109	Axle	1
21	667-5-0127-005	C-clip	2
22	649-1-0079-114	Bolt	1
23	661-2-0079-101	Nut	1
24	A20060-0016	Coupler, Male 1/4NPT	1
25	G36-6-2300-109	Air Hose	1
26	524-2-0123-108	Spring	1
27	G36-6-2302-103	Hose Connector, Elbow	1
28	G36-4-2000-105	Air Motor	1
29	515-3-0120-107	Copper Washer	1
30	651-7-0063-209	Hose Connector, Straight	1
-	G36-3-9902-104 *(Atd-7430)* G36-3-9900-100 *(Atd-7431)*	Repair Kit for Hydraulic Unit	-

ONE YEAR LIMITED WARRANTY

For a period of one (1) year from date of purchase, **ATD Tools Inc.** will repair or replace, at its option, without charge, any of its products which fails due to a defect in material or workmanship under normal usage. This limited warranty is a consumer's exclusive remedy.

Performance of any obligation under this warranty may be obtained by returning the warranted product, freight prepaid, to **ATD Tools Inc.** Warranty Service Department,160 Enterprise Drive, Wentzville, MO 63385.

Except where such limitations and exclusions are specifically prohibited by applicable law, (1) THE CONSUMER'S SOLE AND EXCLUSIVE REMEDY SHALL BE THE REPAIR OR REPLACEMENT OF DEFECTIVE PRODUCTS AS DESCRIBED ABOVE. (2) **ATD Tools Inc.** SHALL NOT BE LIABLE FOR ANY CONSEQUENTIAL OR INCIDENTAL DAMAGE OR LOSS WHATSOEVER. (3) ANY IMPLIED WARRANTIES, INCLUDING WITHOUT LIMITATION THE IMPLIED WARRANTIES OF MERCHANTABILITY AND FITNESS FOR A PARTICULAR PURPOSE, SHALL BE LIMITED TO ONE YEAR, OTHERWISE THE REPAIR, REPLACEMENT OR REFUND AS PROVIDED UNDER THIS EXPRESS LIMITED WARRANTY IS THE EXCLUSIVE REMEDY OF THE CONSUMER, AND IS PROVIDED IN LIEU OF ALL OTHER WARRANTIES, EXPRESS OR IMPLIED. (4) ANY MODIFICATION, ALTERATION, ABUSE, UNAUTHORIZED SERVICE OR ORNAMENTAL DESIGN VOIDS THIS WARRANTY AND IS NOT COVERED BY THIS WARRANTY.

Some states do not allow limitations on how long an implied warranty lasts, so the above limitation may not apply to you. Some states do not allow the exclusion or limitation of incidental or consequential damages, so the above limitation or exclusion may not apply to you. This warranty gives you specific legal rights, and you may also have other rights which vary from state to state.

ADVANCED TOOL DESIGN

Atd Tools Inc.
160 Enterprise Drive, Wentzville, MO 63385
Tel: (636)327-9050 Fax: (636)327-9044