Hydraulic Clutch Jack

Operating Instructions & Parts Manual

Model Number
Atd-7404

Capacity
500 Lb.

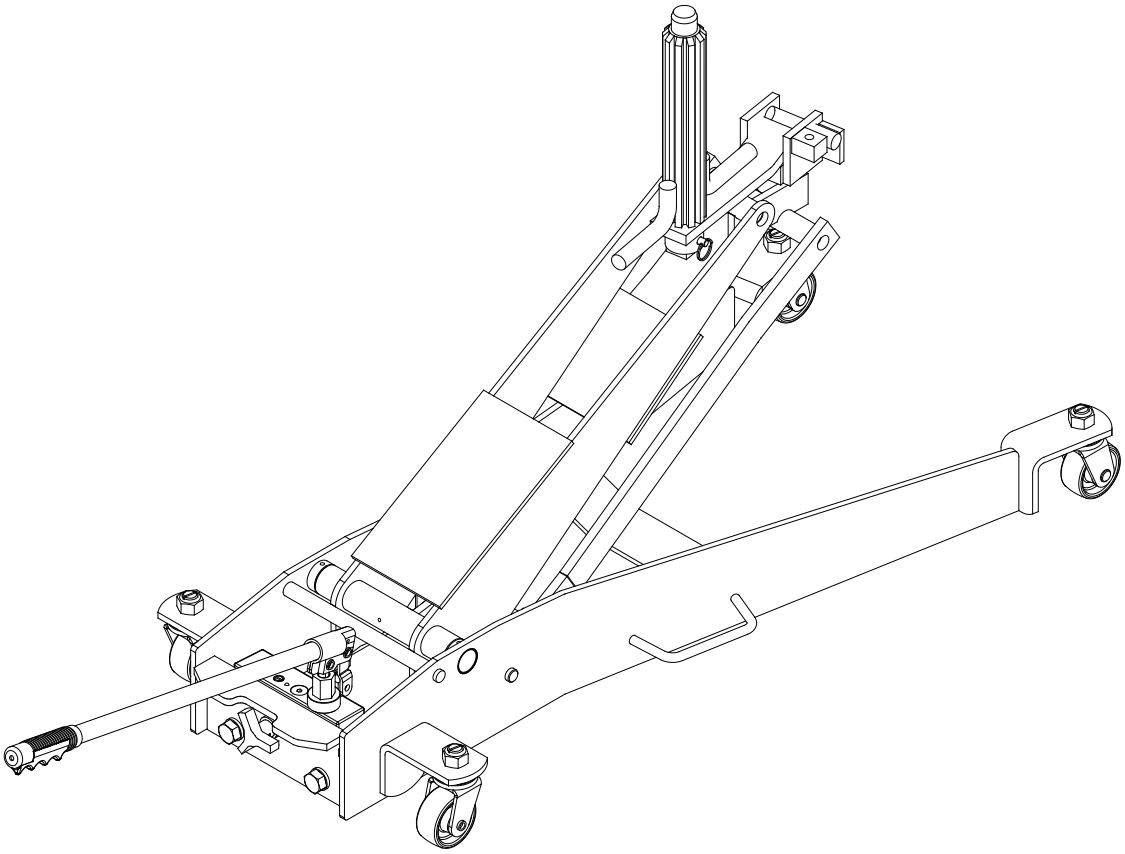

Atd Tools Inc.
160 Enterprise Drive, Wentzville MO 63385

Printed in China
ATD7404-M0 05/07

Save these instructions. For your safety, read, understand, and follow the information provided with and on this jack. The owner and operator of this equipment shall have an understanding of this jack and safe operating procedures before attempting to use. The owner and operator shall be aware that use and repair of this product may require special skills and knowledge. Instructions and safety information shall be conveyed in the operator's native language before use of this jack is authorized. If any doubt exists as to the safe and proper use of this jack, remove from service immediately. **Inspect before each use.** Do not use if broken, bent, cracked, or damaged parts (including labels) are noted. Any jack that appears damaged in any way, operates abnormally or is missing parts, shall be removed from service immediately. If the jack has been or suspected to have been subjected to a shock load (a load dropped suddenly, unexpectedly upon it), immediately discontinue use until jack has been checked by an Atd Tools authorized service center. It is recommended that an annual inspection be done by qualified personnel. Labels and Operator's Manuals are available from manufacturer.

PRODUCT DESCRIPTION

Atd Tools Hydraulic Clutch Jack is designed for clutch/ flywheel removal and installation. **Intended use:** to remove, install and transport (in lowest position) both 14" and 15-1/2" clutches and flywheels. The two most common spline sizes, 1-3/4" and 2" diameter, are included with this product. The head plate enables clutch to be positioned in either horizontal position for clearing underneath vehicle or vertical position for installation and removal. The spline sleeve rotates 360 degrees, turns side to side and vertically tilts for precise clutch alignment.

DO NOT USE FOR ANY PURPOSE OTHER THAN THOSE USES OUTLINED ABOVE !

SPECIFICATIONS

Model	Capacity	Jack Size (L x W x H)	Min. Height	Max. Height	Spline Dia.	Shaft Dia.	Volume of Hyd. Oil	Net Weight
Atd-7404	500 lb.	44 1/2" x 22 1/2" x 16"	16 1/2"	42"	1-3/4" & 2"	1"	6.6 OZ/ 195 mL	145 lb.

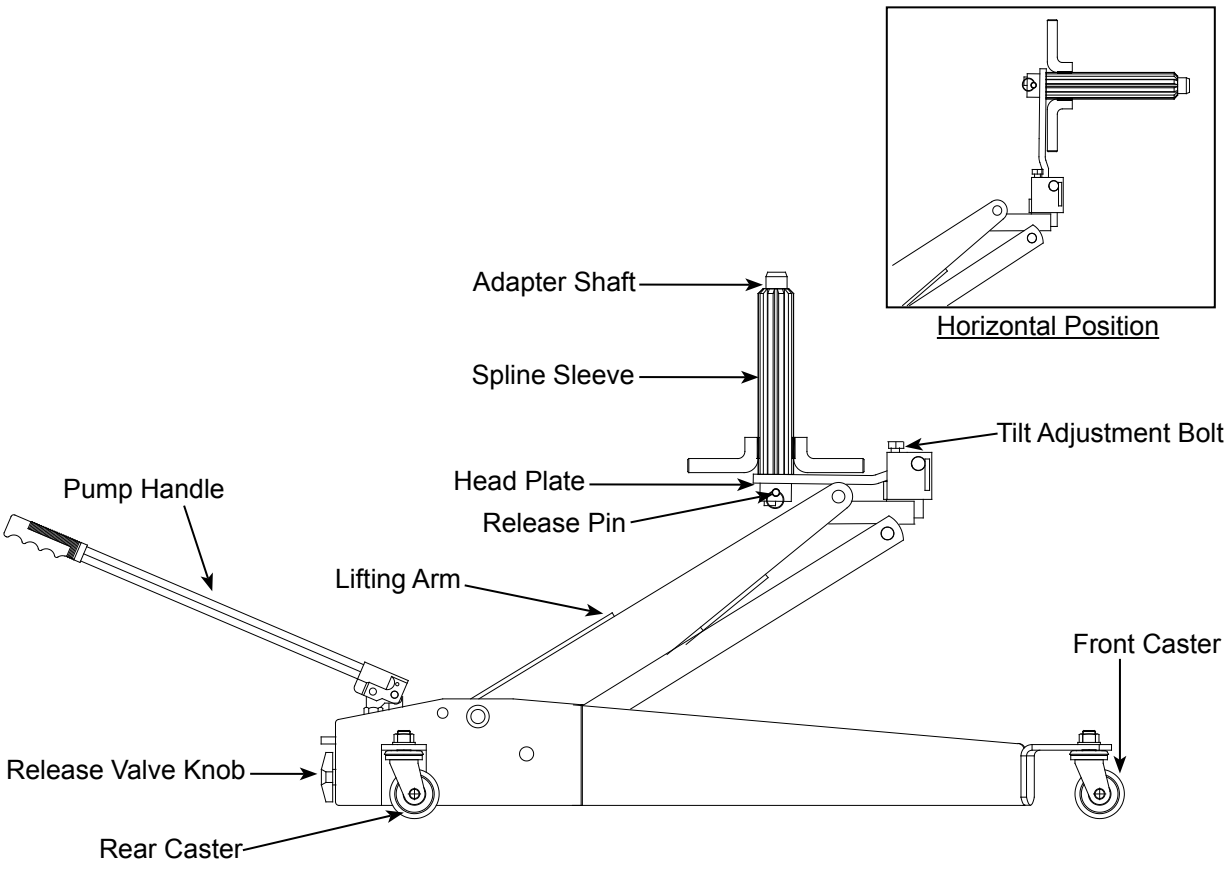

Figure 1 - Model Atd7404 Components

BEFORE USE

1. Verify that the product and the application are compatible, if in doubt call Atd Tools Technical Service (636)327-9050.
2. Before using this product, read the operator's manual completely and familiarize yourself thoroughly with the product, its components and recognize the potential hazards associated with its use.
3. Open the release valve by turning the release valve knob counter-clockwise (no more than 1/2 full turn).
4. With lifting arm fully lowered, locate and remove the oil filler plug. Pump handle 6 to 8 full strokes. Ensure the oil level is within ~3/16" from the inner cylinder as viewed from the oil filler hole. Reinstall the oil filler plug. Close release valve by turning it clockwise until firm resistance is felt.
5. Check to ensure that jack rolls freely, that the pump and release valve operate smoothly. Raise and lower the unloaded jack throughout the advertised lift range before putting into service.
6. Replace worn or damaged parts and assemblies with Factory Authorized Replacement Parts only. Lubricate as instructed in Maintenance Section.

⚠ WARNING

- Study, understand, and follow all printed materials provided with/on this device before use.
- Do not exceed rated capacity.
- Use only on hard, level, seamless surface.
- Do not allow any part of your body under the lift arm or load while the jack is supporting a load.
- Use only the factory supplied adapters as a means of contacting the load. Never use any other part of the jack as a lifting surface.
- Use of this jack is limited to the removal, installation and transportation of clutch/flywheel.
- Adequately support the vehicle before starting repairs.
- Failure to heed these markings may result in personal injury and/or property damage.

OPERATION

Removing a Clutch

1. Select the correct size spline sleeve. Place the spline on the adapter shaft, then attach the assembly to the head plate with release pin & retaining pin provided.
2. Close the release valve by tightening the release valve knob. Pump the handle to raise the lifting arm and align the spline sleeve with the clutch.
3. Tilt the head plate with the tilt adjustment bolt to align it with the clutch bore. Slide the spline sleeve into the clutch.
4. Remove the clutch mounting bolts and back the jack and clutch away from the flywheel.

⚠ WARNING

Be sure all tools and personnel are clear before lowering load.

Transporting the Clutch while on Jack

Be sure the adapter shaft is in the vertical position and the jack is fully lowered before transporting, as shown in Figure 2.

Loading and Unloading a Clutch from the Jack

1. To load or unload a clutch from the jack, be sure the adapter shaft is in the vertical position, as shown in Figure 2.
2. Add or remove one piece of the clutch at a time.

Installing a Clutch

1. Raise the clutch into the horizontal position for installation and tilt the clutch using the tilt adjustment bolt to align with the flywheel.
2. Put the jack and clutch into position so that the spline shaft engages the pilot bearing in the flywheel. Install and tighten the clutch mounting bolts.

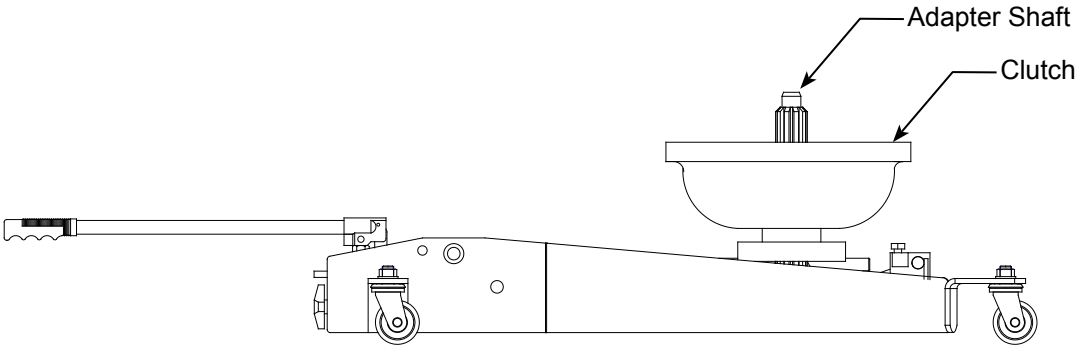

Figure 2 - Illustration of Lowest Position with Clutch

OPERATING with Optional Flywheel Adapter

Note. Flywheel Adapter Assembly is not included with the unit. To order, refer to replacement parts section.

Install the flywheel adapter

1. Keep jack in lowest position. Remove the release pin, then remove the spline sleeve and adapter shaft.
2. Install the flywheel adapter assembly, then secure with the quick release pin.

Note: Flywheel adapter assembly includes flywheel adapter, a shorter adapter shaft, and a C-clip (Fig. 3). Use the shorter adapter shaft on flywheel adapter only.

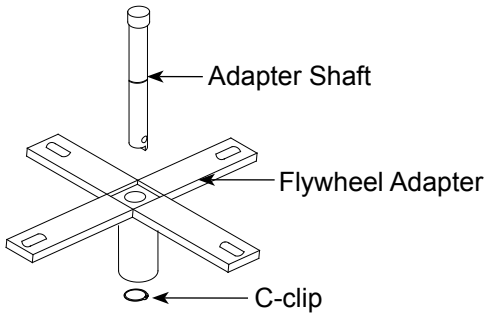

Figure 3 - Flywheel adapter assembly components

Removing a Flywheel

1. Remove all the flywheel attaching bolts (flywheel to crankshaft bolts) except for the three bolts pointed in Figure 4.
2. Close the release valve knob fully. Pump the handle to raise the lifting arm and align the flywheel adapter to the flywheel using the tilt adjustment bolt.
3. Center the flywheel adapter to the flywheel and bolt the adapter to the flywheel. Leave room to access the remaining three flywheel attaching bolts retained on the flywheel.
4. Ensure the releave valve knob of the jack is closed tightly before removing the last three flywheel attaching bolts.
5. Remove the jack and flywheel away from the engine and slowly lower the flywheel by opening the releave valve knob gradually.
6. Ensure jack is fully lowered before transporting.

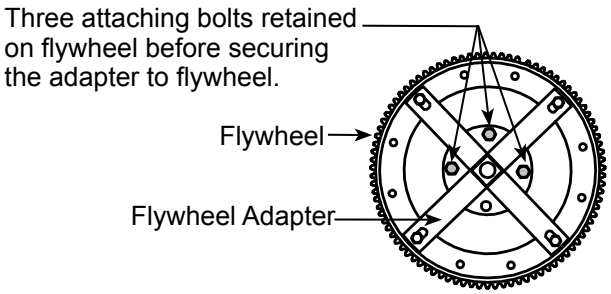

Loading and Unloading a Flywheel from the Jack

1. To load or unload a flywheel from the jack, be sure thejack is in lowest position.
2. While supporting the flywheel, remove the flywheel from the adapter.

Installing a Flywheel

1. Close release valve knob, pump the handle and raise the flywheel into position shown in Figure 4 for installation. Adjust the flywheel using tilt adjustment bolt to align the flywheel with the crankshaft.
2. Install and tighten the attaching bolts.

Note: Tighten the flywheel attaching bolts gradually. Each bolt should be tightened to the specified torque in a crisscross method. Refer to vehicle service manual for the tightening torque.

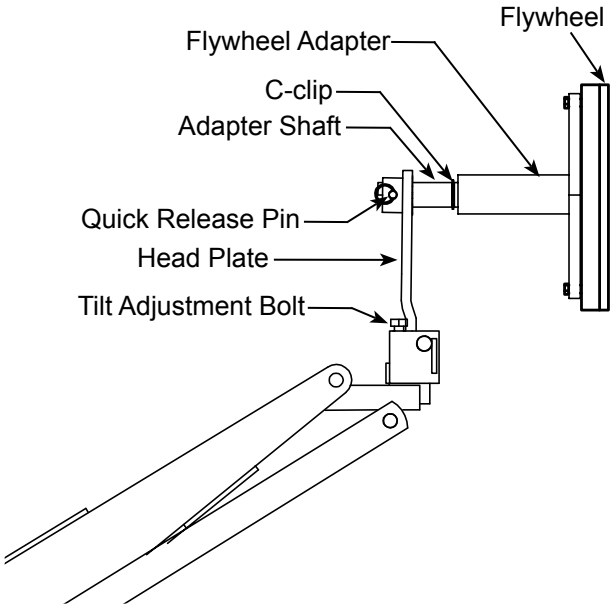

Figure 4 - Flywheel Adapter Operational Illustration

MAINTENANCE

Important: Use only good grade hydraulic jack oil. Avoid mixing different types of fluid and NEVER use brake fluid, turbine oil, transmission fluid, motor oil or glycerin. Improper fluid can cause premature failure of the jack and the potential for sudden and immediate loss of load. Mobil DTE 13M or equivalent recommended.

Adding oil

1. With lifting arm fully lowered set jack in its upright, level position. Locate and remove oil filler plug.
2. Fill with oil until ~3/16" above the inner cylinder as seen from the oil filler hole. Reinstall oil filler plug.

Changing oil

For best performance and longest life, replace the complete fluid supply at least once per year.

1. With lifting arm fully lowered, remove oil filler plug.
2. Lay the jack on its side and drain the fluid into a suitable container.

Note. Dispose of hydraulic fluid in accordance with local regulations.

3. Fill with oil until ~3/16" above the inner cylinder as seen from the oil filler hole. Reinstall oil filler plug.

Lubrication

A periodic coating of light lubricating oil to pivot points, axles and hinges will help to prevent rust and assure that wheels, casters and pump assemblies move freely.

Cleaning

Periodically check the pump piston and ram for signs of rust or corrosion. Clean as needed and wipe with an oily cloth.

Note: Never use sandpaper or abrasive material on these surfaces!

Storage

When not in use, store the jack with lifting arm fully lowered.

TROUBLESHOOTING

Symptom	Possible Causes	Corrective Action
Jack will not lift load	• Release valve not tightly closed • Overload condition	• Ensure release valve tightly closed • Remedy overload condition
Jack will lift, but not maintain pressure	• Release valve not tightly closed • Overload condition • Hydraulic unit malfunction	• Ensure release valve tightly closed • Remedy overload condition • Contact Atd Tools Tech. Service
Jack will not lower after unloading	• Reservoir overfilled • Linkage binding	• Ensure load is removed, then drain fluid to proper level • Clean and lubricate moving parts
Poor lift performance	• Fluid level low • Air trapped in system	• Ensure proper fluid level • With ram fully retracted, remove oil filler plug to let pressurized air escape, then reinstall oil filler plug
Jack will not lift to full extension	• Fluid level low	• Ensure proper fluid level

REPLACEMENT PARTS

Not all components of the jack are replacement items, but are illustrated as a convenient reference of location and position in the assembly sequence. When ordering parts, give Model number, part number and description below. Call or write for current pricing: Atd Tools Inc. 160 Enterprise Drive, Wentzville, MO 63385. Tel:(636)327-9050 Fax:(636)327-9044

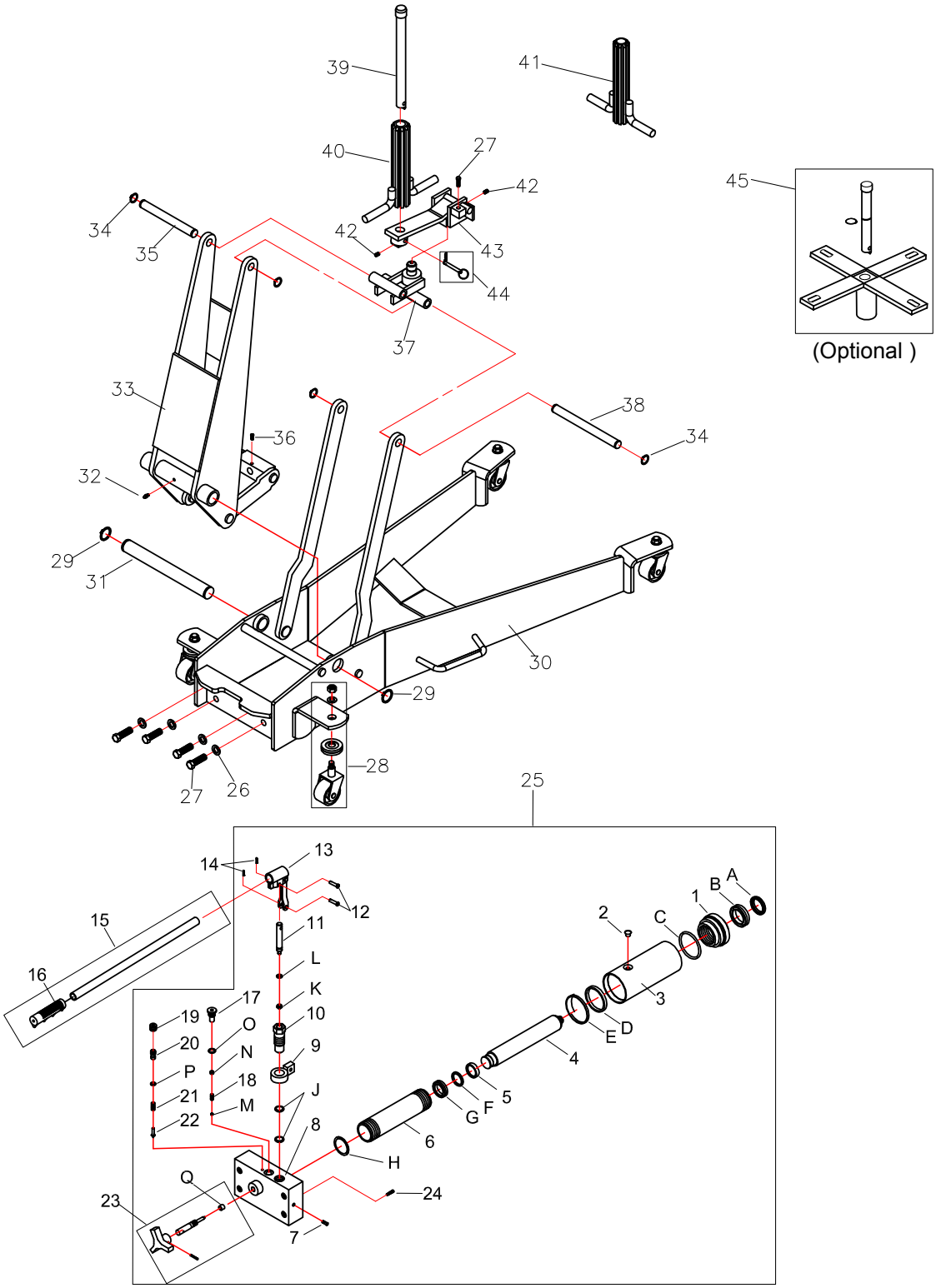

Figure 3 - Replacement Parts Illustration for Model Atd7404

Replacement Parts List for Model Atd7404

Item	Part No.	Description	Qty.
1	N/A	Top nut	1
2	5905-00100-100	Filler Plug	1
3	N/A	Reservoir	1
4	N/A	Piston Rod	1
5	N/A	Ram Bearing	1
6	N/A	Cylinder	1
7	N/A	Screw	1
8	N/A	Base	1
9	4200-01006-000	Handle Sleeve Seat	1
10	4200-01002-000	Pump Cylinder	1
11	4200-01401-000	Pump Piston	1
12	5405-07027-000	Pin	2
13	4200-01300-000	Handle Sleeve	1
14	N/A	Retaining Pin	2
15	4500-02000-000	Handle Assembly	1
16	BL80-20002-000	Handle Grip	1
17	N/A	Screw	1
18	N/A	Spring	1
19	N/A	Screw	1
20	N/A	Safety Valve Screw	1
21	N/A	Safety Spring	1
22	N/A	Needle	1
23	G410-90009-K02	Release Valve Assy.	1
24	N/A	Filter	1
25	G410-70000-000	Hydraulic unit	1
26	N/A	Lock Washer	4
27	5102-12035-000	Bolt	5
28	G410-90009-K01	Caster Assembly	4
29	N/A	Snap Ring	2
30	N/A	Chassis	1

Item	Part No.	Description	Qty.
31	N/A	Lift Arm Axle	1
32	5701-00006-000	Grease Fitting	1
33	N/A	Lift Arm	1
34	N/A	Snap Ring	4
35	N/A	Lift Arm Axle	1
36	N/A	Bolt	1
37	N/A	Spline Adapter Seat	1
38	N/A	Parallel Link Axle	1
39	G410-00001-000	Adapter Shaft	1
40	G410-10000-000	Spline Sleeve, 2”	1
41	G410-80000-000	Spline Sleeve, 1-3/4”	1
42	N/A	Bolt	2
43	G410-20000-000	Spline Adapter	1
44	G410-90009-K04	Release Pin	1
45	ATD7405	Flywheel Adapter Assembly	-
*	42000S-102	Seal Kit	-

(*) Seal Kit Contents:		
Item	Description	Qty.
2	Filler Plug	1
A	Seal	1
B	U-cup	1
C	O-ring	1
D	Back-up Ring	1
E	Seal	1
F	Back-up Ring	1
G	U-cup	1
H	Copper Gasket	1
J	O-ring	2
K	Seal	1
L	O-ring	1
M	Steel Ball	1
N	Steel Ball	1
O	O-ring	1
P	O-ring	1
Q	Oil Seal	1

ONE YEAR LIMITED WARRANTY

For a period of one (1) year from date of purchase, **ATD Tools Inc.** will repair or replace, at its option, without charge, any of its products which fails due to a defect in material or workmanship under normal usage. This limited warranty is a consumer's exclusive remedy.

Performance of any obligation under this warranty may be obtained by returning the warranted product, freight prepaid, to **ATD Tools Inc.** Warranty Service Department, 160 Enterprise Drive, Wentzville, MO 63385.

Except where such limitations and exclusions are specifically prohibited by applicable law, (1) THE CONSUMER'S SOLE AND EXCLUSIVE REMEDY SHALL BE THE REPAIR OR REPLACEMENT OF DEFECTIVE PRODUCTS AS DESCRIBED ABOVE. (2) **ATD Tools Inc.** SHALL NOT BE LIABLE FOR ANY CONSEQUENTIAL OR INCIDENTAL DAMAGE OR LOSS WHATSOEVER. (3) ANY IMPLIED WARRANTIES, INCLUDING WITHOUT LIMITATION THE IMPLIED WARRANTIES OF MERCHANTABILITY AND FITNESS FOR A PARTICULAR PURPOSE, SHALL BE LIMITED TO ONE YEAR, OTHERWISE THE REPAIR, REPLACEMENT OR REFUND AS PROVIDED UNDER THIS EXPRESS LIMITED WARRANTY IS THE EXCLUSIVE REMEDY OF THE CONSUMER, AND IS PROVIDED IN LIEU OF ALL OTHER WARRANTIES, EXPRESS OR IMPLIED. (4) ANY MODIFICATION, ALTERATION, ABUSE, UNAUTHORIZED SERVICE OR ORNAMENTAL DESIGN VOIDS THIS WARRANTY AND IS NOT COVERED BY THIS WARRANTY.

Some states do not allow limitations on how long an implied warranty lasts, so the above limitation may not apply to you. Some states do not allow the exclusion or limitation of incidental or consequential damages, so the above limitation or exclusion may not apply to you. This warranty gives you specific legal rights, and you may also have other rights which vary from state to state.