MODEL B67586 HYDRAULIC UNIT (4 TON - SERIES "A")

OWNER/OPERATOR MANUAL

DESCRIPTION

Model B67586 hydraulic unit is a manually operated device designed for shop and bench presses.

OWNER/OPERATOR RESPONSIBILITY

It is the owner/operator responsibility to properly use and maintain this equipment.

The instructions and warning contained in this manual shall be read and understood by the owner/operator prior to operating this equipment.

If an owner/operator does not understand English, the contents of this manual shall be explained in the owner/operator native language to assure the owner/operator comprehends.

It is the owners/operators responsibility to maintain the legibility of all warning and instruction labels.

The owner/operator shall retain this manual for future reference to important warnings, operating and maintenance instructions.

INSPECTION

Prior to operation or maintenance a visual inspection shall be made. Check for hydraulic leaks, damaged accessories, worn or missing parts.

Check operation to make sure ram operates smoothly and ram is not binding.

Any unit that is damaged, badly worn, or operates abnormally shall be removed from service. Contact a factory authorized service center for repair.

Any unit component that has been subjected to an abnormal load or shock, shall be inspected by a factory authorized service center.

An annual inspection is recommended to be performed by a factory authorized service center.

⚠ WARNING

FAILURE TO HEED THE FOLLOWING WARNINGS MAY RESULT IN PERSONAL INJURY AND/OR PROPERTY DAMAGE.

- This unit is a hydraulic pressing device only. Make sure the work is supported by other appropriate means.
- Do not overload the unit. Overloading may cause damage or failure of the unit.
- Do not exceed the rated 4 ton capacty of the unit.
- Always make sure work is centered on the ram plunger.
- Do not release a load suddenly. The resulting shock may damage the unit.
- Make sure all mounting hardware is secure before using the unit . Do not substitute hardware provided.

OPERATION

EXTEND

Turn release valve handle fully clockwise. Insert pump handle in handle socket, and pump handle.

RETRACT

Slowly turn release valve handle counter-clockwise and allow ram to retract. Ram retracting speed is controlled by the amount the release valve handle is turned.

MAINTENANCE

Lubricate ram and check the unit hydraulic reservoir oil level as required to properly maintain the unit.

LUBRICATION

Lubricate unit as follows:

A. Clean unit as required before applying lubricant.

B. Apply a light coat of oil to ram plunger

C. Extend and lower ram to distribute oil.

CHECKING HYDRAULIC OIL LEVEL

⚠ CAUTION

BRAKE OR TRANSMISSION FLUIDS WILL DAMAGE EQUIPMENT SEALS.

A. Open release valve and push ram to its lowest position.

B. Remove filler plug.

C. Fill reservoir to bottom of filler plug hole with clean hydraulic jack oil. Do not overfill.

D. Reinstall filler plug.

Lincoln Automotive
St. Louis, MO 63120-1578
Customer Service (314) 679-4300

Copyright 1995
Printed in Taiwan R.O.C.

I6 **B675860000A0**

REPAIR

Repair is limited to replacement of listed service parts. Special procedures and tools are required. If the unit requires repair, contact a factory authorized service center.

SERVICE PARTS

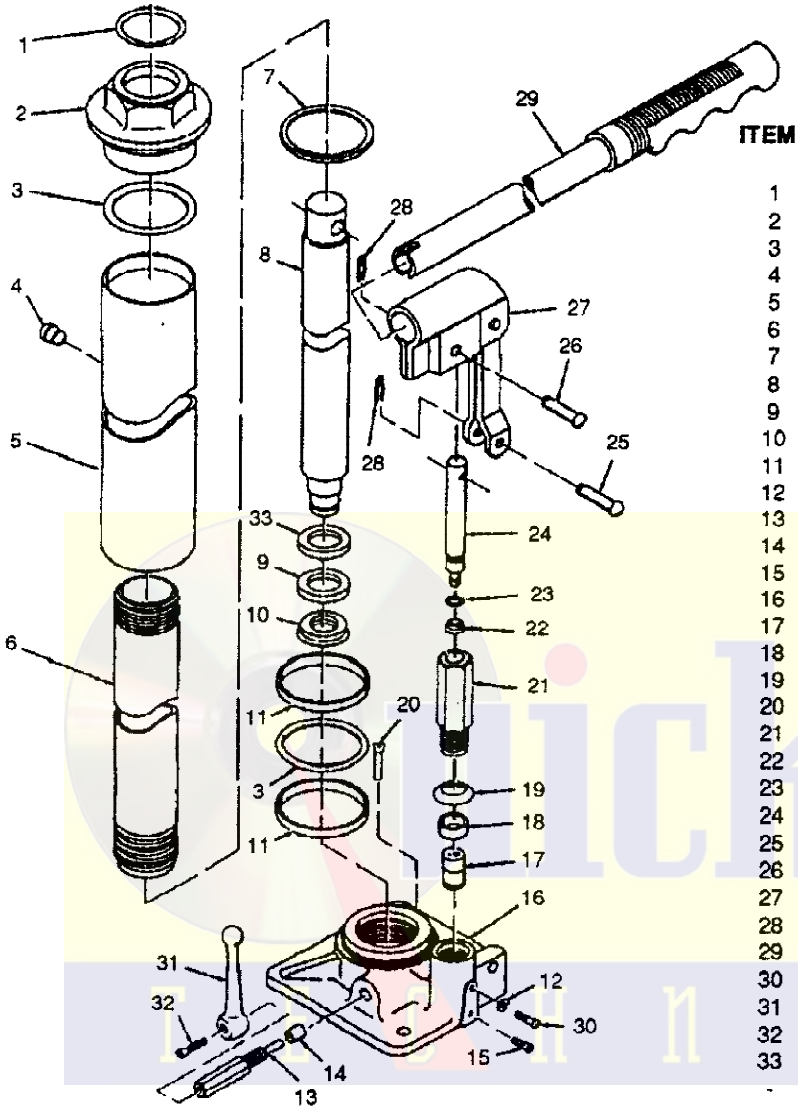

ITEM	PART NO.	QUAN	DESCRIPTION
1	H6874900▲	1	O-ring, Top nut
2	H6875000	1	Top nut
3	H6875100▲	2	O-ring
4	H6953000▲	1	Filler plug
5	H6875200	1	Reservoir
6	H6875300	1	Ram cylinder
7	H6875400▲	2	Washer
8	H6875500	1	Ram plunger
9	H6875600▲	1	Back-up washer
10	H6875700▲	1	Ram U-cup
11	H6875800▲	2	Back-up washer
12	H6875900▲	1	O-ring
13	H6876000	1	Release valve
14	H6876100▲	1	Packing
15	H6812300	1	Valve plug
16	H6876500	1	Base
17	H6876600▲	1	Hydraulic cartridge
18	H6954700▲	1	Pump packing
19	H6954600	1	Washer
20	H6941700▲	1	Filter
21	H6876900	1	Pump cylinder
22	H6877000▲	1	Piston cup assembly
23	H6877100▲	1	O-ring
24	H6877200	1	Pump piston
25	H6877300	1	Pin
26	H6877400	1	Pump piston pin
27	H6896200	1	Handle socket
28	H6951200	1	Retaining pin
29	H6866900	1	Handle
30	H6877700	1	Screw
31	H6877800	1	Release valve handle
32	H6877900	1	Screw
33	H6896300	1	Ram spacer
-	H6857100	1	Warning decal (not shown)
-	H6848000	1	Repair kit

▲ Incuded in Repair Kit H6848000.

LIMITED WARRANTY

Lincoln, A Pentair Company, warrants that jacks and related service equipment manufactured by it will be free from defects in material and workmanship during the one (1) year following the date of purchase. This warranty is extended to the original retailer purchaser only. If a jack or related service equipment proves to be defective during this warranty period, it will be repaired or replaced without charge. To obtain repair or replacement, it must be shipped, transportation charges prepaid, with proof of date of purchase, to a Lincoln authorized Warranty and Service Center, within the one (1) year following the date of purchase. This warranty does not apply to parts damaged from accident, overload, or abuse, nor does it apply to any equipment which has been altered or used with special attachments other than those recommended by Lincoln. No other express warranty applies to jacks and related service equipment manufactured by Lincoln.

ANY IMPLIED WARRANTIES applicable to jacks and related service equipment manufactured by Lincoln, INCLUDING THE WARRANTIES OF MERCHANTABILITY AND FITNESS FOR A PARTICULAR PURPOSE, WILL LAST ONLY FOR ONE (1) YEAR FROM THE DATE OF PURCHASE. SOME STATES DO NOT ALLOW LIMITATIONS ON HOW LONG AN IMPLIED WARRANTY LASTS SO THE ABOVE LIMITATION MAY NOT APPLY TO YOU.

In no event shall Lincoln be liable for incidental or consequential damages. The liability of Lincoln on any claim or damage arising out of the sale, resale, or use of a jack or related service equipment shall in no event exceed the purchase price. SOME STATES DO NOT ALLOW THE EXCLUSION OR LIMITATION OF INCIDENTAL OR CONSEQUENTIAL DAMAGES, SO THE ABOVE LIMITATION OR EXCLUSION MAY NOT APPLY TO YOU.

THIS WARRANTY GIVES YOU SPECIFIC LEGAL RIGHTS, AND YOU MAY ALSO HAVE OTHER RIGHTS WHICH VARY FROM STATE TO STATE.